ZRT/ZRTA_GDDR3 BWD ULT SYSTEM BLOCK DIAGRAM

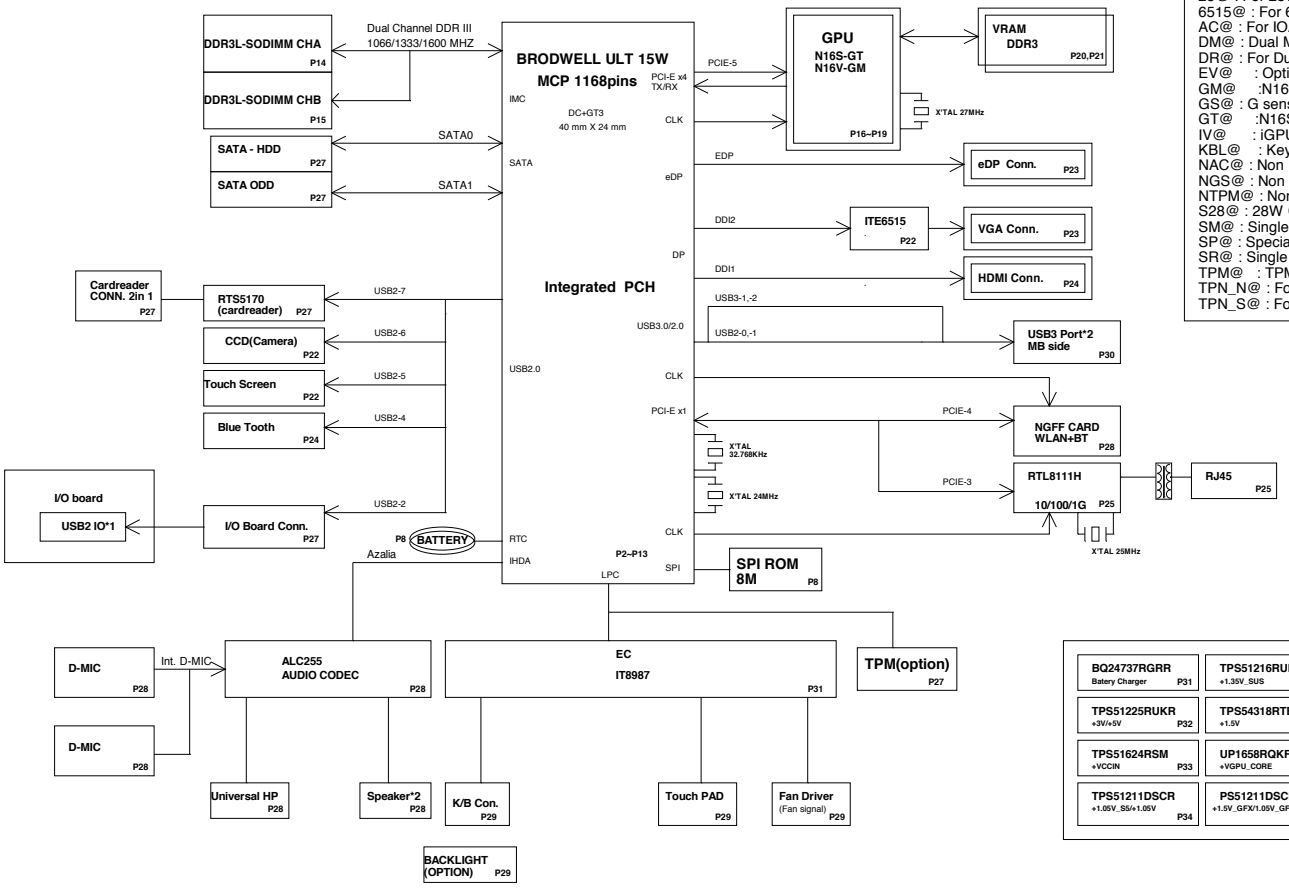

BOM

15@ : For 15W CPU
28@ : For 28W CPU
6515@ : For 6515 stuff
AC@ : For IOAC
DM@ : Dual MIC
DR@ : For Dual Rank
EV@ : Optimus
GM@ :N16V-GM /WO GC6
GS@ : G sensor
GT@ :N16S-GT /GC6
IV@ : iGPU
KBL@ : Keyboard backlight
NAC@ : Non IOAC
NGS@ : Non G sensor
NTPM@ : Non TPM
S28@ : 28W Change BOM
SM@ : Single MIC
SP@ : Special
SR@ : Single Rank
TPM@ : TPM
TPN_N@ : For TPM 2.0
TPN_S@ : For TPM 1.2

BQ24737RGRR Batery Charger P31	TPS51216RUKR +1.35V_SUS P35	Thermal Protection Discharger P36
TPS51225RUKR +3V/+5V P32	TPS54318RTER +1.5V P36	
TPS51624RSM +VCCIN P33	UP1658RQKF +VGPU_CORE P37	
TPS51211DSCR +1.05V_S5/+1.05V P34	PS51211DSCR +1.5V_GFX/1.05V_GFX/3V_GFX P38	

www.schematic-x.blogspot.com

Quanta Computer Inc.
PROJECT : ZRT/ZRTA
Size | Document Number | Rev 3A
Block Diagram
Date: Wednesday, February 11, 2015 | Sheet 1 of 44

Haswell ULT (DISPLAY,eDP)

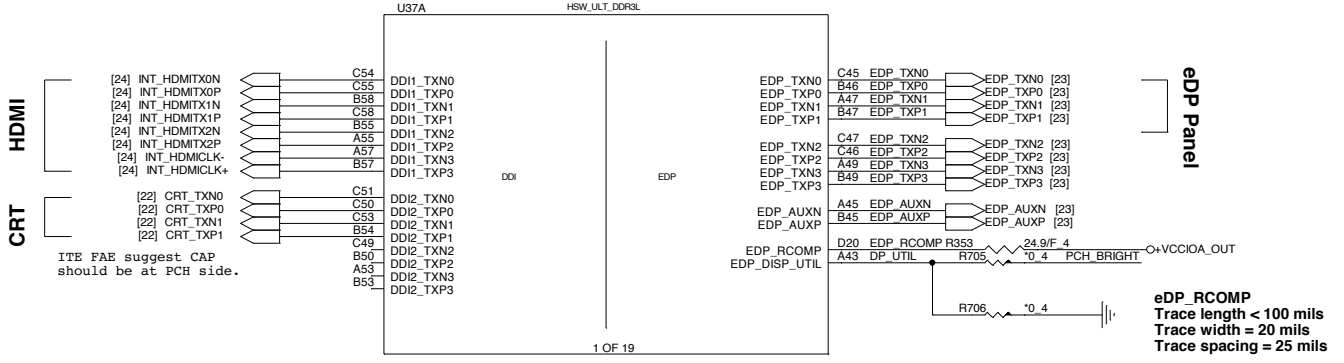

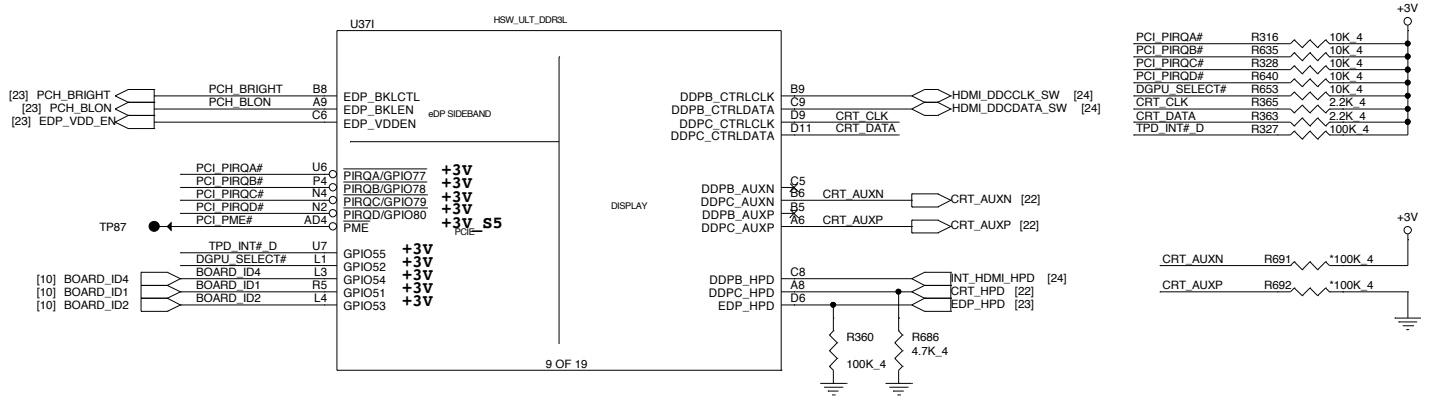

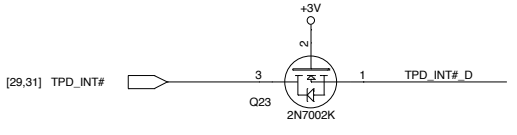

Quanta Computer Inc.		
PROJECT : ZRT/ZRTA		
Size	Document Number: Haswell 3/5 (DDI/eDP)	Rev 3A
Date: Wednesday, February 11, 2015	Sheet 2 of 44	

Change Data and DQS to interleave.

Haswell ULT (DDR3L)

U37C — HSW_ULT_DDR3L

[14] M_A_DQ0	M_A_DQ0 AH63	SA_DQ0	SA_CLK#0	AU37	M_A_CLK0# [14]
[14] M_A_DQ1	M_A_DQ1 AH62	SA_DQ1	SA_CLK0	AV37	M_A_CLK0 [14]
[14] M_A_DQ2	M_A_DQ2 AK63	SA_DQ2	SA_CLK#1	AW36	M_A_CLK1# [14]
[14] M_A_DQ3	M_A_DQ3 AK62	SA_DQ3	SA_CLK1	AY36	M_A_CLK1 [14]
[14] M_A_DQ4	M_A_DQ4 AH61	SA_DQ4			
[14] M_A_DQ5	M_A_DQ5 AH60	SA_DQ5	SA_CKE0	AU43	M_A_CKE0 [14]
[14] M_A_DQ6	M_A_DQ6 AK61	SA_DQ6	SA_CKE1	AW43	M_A_CKE1 [14]
[14] M_A_DQ7	M_A_DQ7 AK60	SA_DQ7	SA_CKE2	AY42	
[14] M_A_DQ8	M_A_DQ8 AM63	SA_DQ8	SA_CKE3	AY43	
[14] M_A_DQ9	M_A_DQ9 AM62	SA_DQ9			
[14] M_A_DQ10	M_A_DQ10 AP63	SA_DQ10	SA_CS#0	AP33	M_A_CS#0 [14]
[14] M_A_DQ11	M_A_DQ11 AP62	SA_DQ11	SA_CS#1	AR32	M_A_CS#1 [14]
[14] M_A_DQ12	M_A_DQ12 AM61	SA_DQ12			
[14] M_A_DQ13	M_A_DQ13 AM60	SA_DQ13	SA_ODT0	AP32	TP26
[14] M_A_DQ14	M_A_DQ14 AP61	SA_DQ14			
[14] M_A_DQ15	M_A_DQ15 AP60	SA_DQ15	SA_RAS	AY34	M_A_RAS# [14]
[15] M_B_DQ0	M_B_DQ0 AP58	SA_DQ16	SA_WE	AW34	M_A_WE# [14]
[15] M_B_DQ1	M_B_DQ1 AR58	SA_DQ17	SA_CAS	AU34	M_A_CAS# [14]
[15] M_B_DQ2	M_B_DQ2 AM57	SA_DQ18			
[15] M_B_DQ3	M_B_DQ3 AK57	SA_DQ19	SA_BA0	AU35	M_A_BS#0 [14]
[15] M_B_DQ4	M_B_DQ4 AL58	SA_DQ20	SA_BA1	AV35	M_A_BS#1 [14]
[15] M_B_DQ5	M_B_DQ5 AK58	SA_DQ21	SA_BA2	AY41	M_A_BS#2 [14]
[15] M_B_DQ6	M_B_DQ6 AR57	SA_DQ22			
[15] M_B_DQ7	M_B_DQ7 AN57	SA_DQ23	SA_MA0	AU36	M_A_A0
[15] M_B_DQ8	M_B_DQ8 AP55	SA_DQ24	SA_MA1	AY37	M_A_A1
[15] M_B_DQ9	M_B_DQ9 AR55	SA_DQ25	SA_MA2	AR38	M_A_A2
[15] M_B_DQ10	M_B_DQ10 AM54	SA_DQ26	SA_MA3	AP36	M_A_A3
[15] M_B_DQ11	M_B_DQ11 AK54	SA_DQ27	SA_MA4	AU39	M_A_A4
[15] M_B_DQ12	M_B_DQ12 AL55	SA_DQ28	SA_MA5	AR36	M_A_A5
[15] M_B_DQ13	M_B_DQ13 AK55	SA_DQ29	SA_MA6	AV40	M_A_A6
[15] M_B_DQ14	M_B_DQ14 AR54	SA_DQ30	SA_MA7	AW39	M_A_A7
[15] M_B_DQ15	M_B_DQ15 AN54	SA_DQ31	SA_MA8	AY39	M_A_A8
[14] M_A_DQ16	M_A_DQ16 AY58	SA_DQ32	SA_MA9	AU40	M_A_A9
[14] M_A_DQ17	M_A_DQ17 AW58	SA_DQ33	SA_MA10	AP35	M_A_A10
[14] M_A_DQ18	M_A_DQ18 AY56	SA_DQ34	SA_MA11	AW41	M_A_A11
[14] M_A_DQ19	M_A_DQ19 AW56	SA_DQ35	SA_MA12	AU41	M_A_A12
[14] M_A_DQ20	M_A_DQ20 AV58	SA_DQ36	SA_MA13	AR35	M_A_A13
[14] M_A_DQ21	M_A_DQ21 AU58	SA_DQ37	SA_MA14	AV42	M_A_A14
[14] M_A_DQ22	M_A_DQ22 AV56	SA_DQ38	SA_MA15	AU42	M_A_A15
[14] M_A_DQ23	M_A_DQ23 AU56	SA_DQ39			
[14] M_A_DQ24	M_A_DQ24 AY54	SA_DQ40	SA_DQSN0	AJ61	M_A_DQS#0
[14] M_A_DQ25	M_A_DQ25 AW54	SA_DQ41	SA_DQSN1	AN62	M_A_DQS#1
[14] M_A_DQ26	M_A_DQ26 AY52	SA_DQ42	SA_DQSN2	AM58	M_B_DQS#0
[14] M_A_DQ27	M_A_DQ27 AW52	SA_DQ43	SA_DQSN3	AM55	M_B_DQS#1
[14] M_A_DQ28	M_A_DQ28 AV54	SA_DQ44	SA_DQSN4	AY57	M_A_DQS#2
[14] M_A_DQ29	M_A_DQ29 AU54	SA_DQ45	SA_DQSN5	AV53	M_A_DQS#3
[14] M_A_DQ30	M_A_DQ30 AY52	SA_DQ46	SA_DQSN6	AL45	M_B_DQS#2
[14] M_A_DQ31	M_A_DQ31 AU52	SA_DQ47	SA_DQSN7	AL48	M_B_DQS#3
[15] M_B_DQ16	M_B_DQ16 AK40	SA_DQ48			
[15] M_B_DQ17	M_B_DQ17 AK42	SA_DQ49	SA_DQSP0	AJ62	M_A_DQS0
[15] M_B_DQ18	M_B_DQ18 AM43	SA_DQ50	SA_DQSP1	AN61	M_A_DQS1
[15] M_B_DQ19	M_B_DQ19 AM45	SA_DQ51	SA_DQSP2	AN58	M_B_DQS0
[15] M_B_DQ20	M_B_DQ20 AK45	SA_DQ52	SA_DQSP3	AN55	M_B_DQS1
[15] M_B_DQ21	M_B_DQ21 AK43	SA_DQ53	SA_DQSP4	AW57	M_A_DQS2
[15] M_B_DQ22	M_B_DQ22 AM47	SA_DQ54	SA_DQSP5	AW53	M_A_DQS3
[15] M_B_DQ23	M_B_DQ23 AM42	SA_DQ55	SA_DQSP6	AL42	M_B_DQS2
[15] M_B_DQ24	M_B_DQ24 AM49	SA_DQ56	SA_DQSP7	AL49	M_B_DQS3
[15] M_B_DQ25	M_B_DQ25 AK49	SA_DQ57			
[15] M_B_DQ26	M_B_DQ26 AM48	SA_DQ58	AP49		
[15] M_B_DQ27	M_B_DQ27 AK49	SA_DQ59	SM_VREF_CA		VREF_CA_CPU
[15] M_B_DQ28	M_B_DQ28 AM48	SA_DQ60	SM_VREF_DQ0	AR51	VREFDQ_SA_M3
[15] M_B_DQ29	M_B_DQ29 AK48	SA_DQ61	SM_VREF_DQ1	AP51	VREFDQ_SB_M3
[15] M_B_DQ30	M_B_DQ30 AM51	SA_DQ62			
[15] M_B_DQ31	M_B_DQ31 AK51	SA_DQ63			

DDR CHANNEL A

3 OF 19

Haswell Processor (DDR3)

U37D — HSW_ULT_DDR3L

[14] M_A_DQ32	M_A_DQ32 AY31	SB_DQ0	SB_CK#0	AM38	M_B_CLK0# [15]
[14] M_A_DQ33	M_A_DQ33 AW31	SB_DQ1	SB_CK0	AN38	M_B_CLK0 [15]
[14] M_A_DQ34	M_A_DQ34 AY29	SB_DQ2	SB_CK#1	AK38	M_B_CLK1# [15]
[14] M_A_DQ35	M_A_DQ35 AW29	SB_DQ3	SB_CK1	AL38	M_B_CLK1 [15]
[14] M_A_DQ36	M_A_DQ36 AY27	SB_DQ4			
[14] M_A_DQ37	M_A_DQ37 AU31	SB_DQ5	SB_CKE0	AY49	M_B_CKE0 [15]
[14] M_A_DQ38	M_A_DQ38 AV29	SB_DQ6	SB_CKE1	AU50	M_B_CKE1 [15]
[14] M_A_DQ39	M_A_DQ39 AU29	SB_DQ7	SB_CKE2	AW49	
[14] M_A_DQ40	M_A_DQ40 AY27	SB_DQ8	SB_CKE3	AV50	
[14] M_A_DQ41	M_A_DQ41 AW27	SB_DQ9			
[14] M_A_DQ42	M_A_DQ42 AY25	SB_DQ10	SB_CS#0	AM32	M_B_CS#0 [15]
[14] M_A_DQ43	M_A_DQ43 AW25	SB_DQ11	SB_CS#1	AK32	M_B_CS#1 [15]
[14] M_A_DQ44	M_A_DQ44 AV27	SB_DQ12			
[14] M_A_DQ45	M_A_DQ45 AU27	SB_DQ13	SB_ODT0	AL32	TP25
[14] M_A_DQ46	M_A_DQ46 AV25	SB_DQ14			
[14] M_A_DQ47	M_A_DQ47 AU25	SB_DQ15	SB_RAS	AM35	M_B_RAS# [15]
[15] M_B_DQ32	M_B_DQ32 AM29	SB_DQ16	SB_WE	AK35	M_B_WE# [15]
[15] M_B_DQ33	M_B_DQ33 AK29	SB_DQ17	SB_CAS	AM33	M_B_CAS# [15]
[15] M_B_DQ34	M_B_DQ34 AL28	SB_DQ18			
[15] M_B_DQ35	M_B_DQ35 AK28	SB_DQ19	SB_BA0	AL35	M_B_BS#0 [15]
[15] M_B_DQ36	M_B_DQ36 AR29	SB_DQ20	SB_BA1	AM36	M_B_BS#1 [15]
[15] M_B_DQ37	M_B_DQ37 AN29	SB_DQ21	SB_BA2	AU49	M_B_BS#2 [15]
[15] M_B_DQ38	M_B_DQ38 AR28	SB_DQ22			
[15] M_B_DQ39	M_B_DQ39 AP28	SB_DQ23	SB_MA0	AP40	M_B_A0
[15] M_B_DQ40	M_B_DQ40 AN26	SB_DQ24	SB_MA1	AR40	M_B_A1
[15] M_B_DQ41	M_B_DQ41 AR26	SB_DQ25	SB_MA2	AP42	M_B_A2
[15] M_B_DQ42	M_B_DQ42 AR25	SB_DQ26	SB_MA3	AR42	M_B_A3
[15] M_B_DQ43	M_B_DQ43 AP25	SB_DQ27	SB_MA4	AR45	M_B_A4
[15] M_B_DQ44	M_B_DQ44 AK26	SB_DQ28	SB_MA5	AP45	M_B_A5
[15] M_B_DQ45	M_B_DQ45 AM26	SB_DQ29	SB_MA6	AW46	M_B_A6
[15] M_B_DQ46	M_B_DQ46 AK25	SB_DQ30	SB_MA7	AY46	M_B_A7
[15] M_B_DQ47	M_B_DQ47 AL25	SB_DQ31	SB_MA8	AY47	M_B_A8
[14] M_A_DQ48	M_A_DQ48 AY23	SB_DQ32	SB_MA9	AU46	M_B_A9
[14] M_A_DQ49	M_A_DQ49 AW23	SB_DQ33	SB_MA10	AK36	M_B_A10
[14] M_A_DQ50	M_A_DQ50 AY21	SB_DQ34	SB_MA11	AV47	M_B_A11
[14] M_A_DQ51	M_A_DQ51 AW21	SB_DQ35	SB_MA12	AU47	M_B_A12
[14] M_A_DQ52	M_A_DQ52 AV23	SB_DQ36	SB_MA13	AK33	M_B_A13
[14] M_A_DQ53	M_A_DQ53 AU23	SB_DQ37	SB_MA14	AR46	M_B_A14
[14] M_A_DQ54	M_A_DQ54 AV21	SB_DQ38	SB_MA15	AP46	M_B_A15
[14] M_A_DQ55	M_A_DQ55 AU21	SB_DQ39			
[14] M_A_DQ56	M_A_DQ56 AY19	SB_DQ40	SB_DQSN0	AW30	M_A_DQS#4
[14] M_A_DQ57	M_A_DQ57 AW19	SB_DQ41	SB_DQSN1	AV26	M_A_DQS#5
[14] M_A_DQ58	M_A_DQ58 AY17	SB_DQ42	SB_DQSN2	AN28	M_B_DQS#4
[14] M_A_DQ59	M_A_DQ59 AW17	SB_DQ43	SB_DQSN3	AN25	M_B_DQS#5
[14] M_A_DQ60	M_A_DQ60 AV19	SB_DQ44	SB_DQSN4	AW22	M_A_DQS#6
[14] M_A_DQ61	M_A_DQ61 AU19	SB_DQ45	SB_DQSN5	AY18	M_A_DQS#7
[14] M_A_DQ62	M_A_DQ62 AV17	SB_DQ46	SB_DQSN6	AN21	M_B_DQS#6
[14] M_A_DQ63	M_A_DQ63 AU17	SB_DQ47	SB_DQSN7	AN18	M_B_DQS#7
[15] M_B_DQ48	M_B_DQ48 AR21	SB_DQ48			
[15] M_B_DQ49	M_B_DQ49 AR22	SB_DQ49	SB_DQSP0	AV30	M_A_DQS4
[15] M_B_DQ50	M_B_DQ50 AL21	SB_DQ50	SB_DQSP1	AW26	M_A_DQS5
[15] M_B_DQ51	M_B_DQ51 AM22	SB_DQ51	SB_DQSP2	AM28	M_B_DQS4
[15] M_B_DQ52	M_B_DQ52 AN22	SB_DQ52	SB_DQSP3	AM25	M_B_DQS5
[15] M_B_DQ53	M_B_DQ53 AP21	SB_DQ53	SB_DQSP4	AV22	M_A_DQS6
[15] M_B_DQ54	M_B_DQ54 AK21	SB_DQ54	SB_DQSP5	AW18	M_A_DQS7
[15] M_B_DQ55	M_B_DQ55 AK22	SB_DQ55	SB_DQSP6	AM21	M_B_DQS6
[15] M_B_DQ56	M_B_DQ56 AN20	SB_DQ56	SB_DQSP7	AM18	M_B_DQS7
[15] M_B_DQ57	M_B_DQ57 AR20	SB_DQ57			
[15] M_B_DQ58	M_B_DQ58 AK18	SB_DQ58			
[15] M_B_DQ59	M_B_DQ59 AL18	SB_DQ59			
[15] M_B_DQ60	M_B_DQ60 AK20	SB_DQ60			
[15] M_B_DQ61	M_B_DQ61 AM20	SB_DQ61			
[15] M_B_DQ62	M_B_DQ62 AR18	SB_DQ62			
[15] M_B_DQ63	M_B_DQ63 AP18	SB_DQ63			

DDR CHANNEL B

4 OF 19

Quanta Computer Inc.

PROJECT : ZRT/ZRTA

Size	Document Number	Rev
	Haswell 2/5 (DDR3 I/F)	3A

Date: Wednesday, February 11, 2015 Sheet 3 of 44

Haswell ULT (SIDEBAND)

H_PECI (50ohm)
Route on microstrip only
Spacing >18 mils
Trace Length: 0.4~6.125 iches

H_PWRGOOD (50ohm)
Trace Length: 1~11.25 inches

CPU_PLTRST# (50ohm)
Trace Length: 10~17 inches

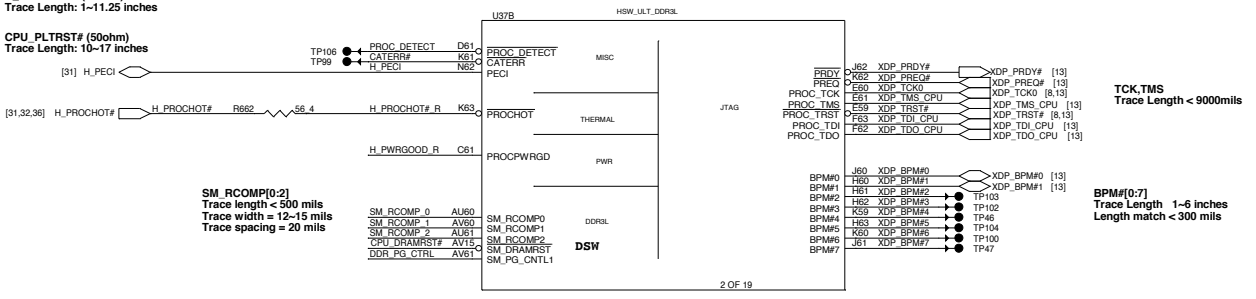

TCK,TMS
Trace Length < 9000mils

SM_RCOMP[0:2]
Trace length < 500 mils
Trace width = 12~15 mils
Trace spacing = 20 mils

BPM#[0:7]
Trace Length 1~6 inches
Length match < 300 mils

DRAM COMP

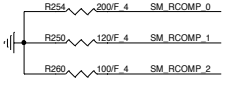

XDP PU/PD

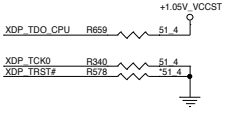

DDR3L ODT GENERATION

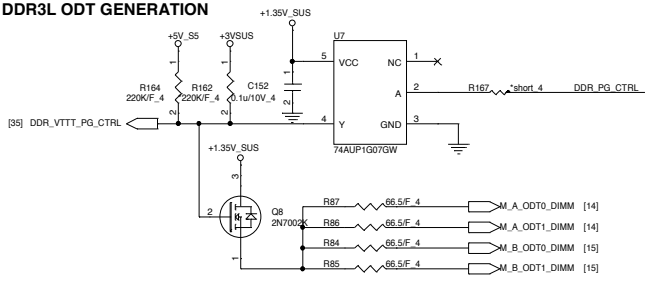

PU/PD of CPU

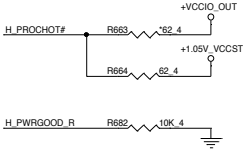

DRAMRST

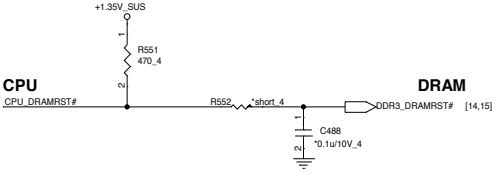

Quanta Computer Inc.

PROJECT : ZRT/ZRTA

Size	Document Number	Rev
	Haswell 1/5 (PEG/DMI/FDI)	3A

Date: Wednesday, February 11, 2015 Sheet 4 of 44

VDDQ Output Decoupling Recommendations		
330uFx2	7343	BOT socket side
22uFx11	0805	5 onTOP, 6 on BOT inside socket cavity
10uFx10	0805	5 onTOP, 5 on BOT inside socket cavity

Haswell ULT (POWER)

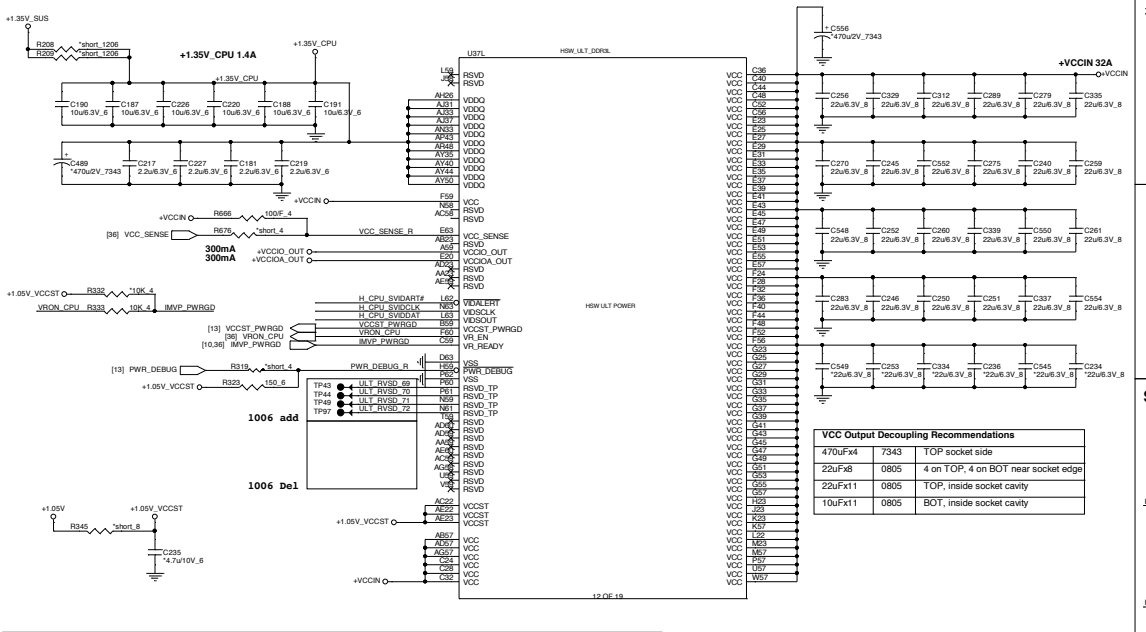

VCC Output Decoupling Recommendations		
470uFx4	7343	TOP socket side
22uFx8	0805	4 on TOP, 4 on BOT near socket edge
22uFx11	0805	TOP, inside socket cavity
10uFx11	0805	BOT, inside socket cavity

VCCST PWRGD

CRB is via +1.05V PG

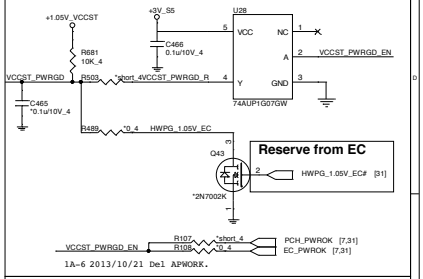

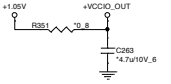

SVID

Layout note: need routing together and ALERT need between CLK and DATA.

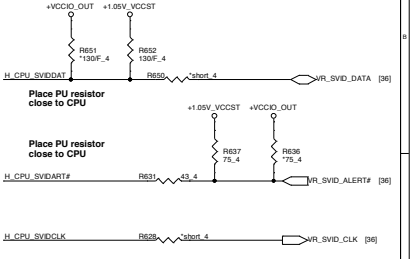

HWPG_1.05V for DDR=1.5V

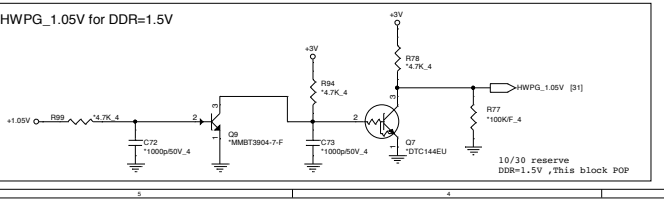

Quanta Computer Inc.

PROJECT : ZRT/ZRTA

Size	Document Number	Rev
	Haswell 4/5 (POWER)	3A

Date: Wednesday, February 11, 2015 Sheet 5 of 44

Haswell ULT (CFG,RSVD)

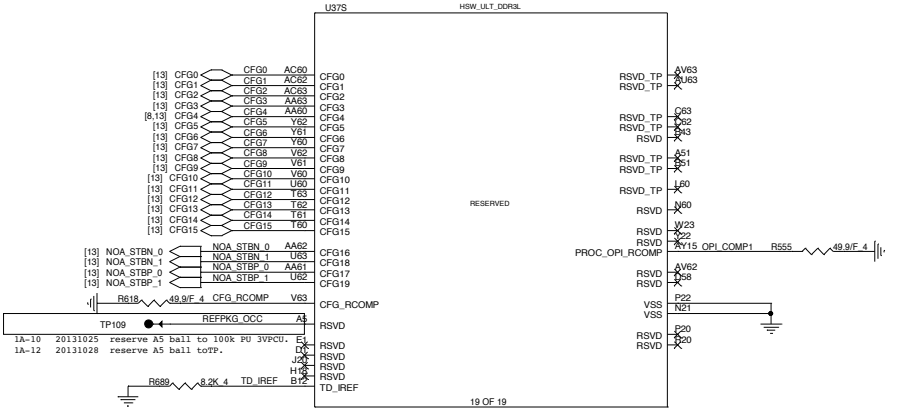

Processor Strapping

	1	0	
CFG0 EAR-STALL/NOT STALL RESET SEQUENCE AFTER PCU PLL IS LOCKED	**(DEFAULT) NORMAL OPERATION; NO STALL**	STALL	CFG0 R289 *1K_4
CFG1 PCH/ PCH LESS MODE SELECTION	**(DEFAULT) NORMAL OPERATION**	PCH-LESS MODE	CFG1 R606 *1K_4
CFG3 PHYSICAL_DEBUG_ENABLED (DFX PRIVACY)	**DISABLED NO PHYSICAL DISPLAY PORT ATTACHED TO EMBEDDED DISPLAY PORT**	ENABLED AN EXTERNAL DISPLAY PORT DEVICE IS CONNECTED TO THE EMBEDDED DISPLAY PORT	CFG3 R610 *1K_4
CFG 8 ALLOW THE USE OF NOA ON LOCKED UNITS	**DISABLED(DEFAULT); IN THIS CASE, NOA WILL BE DISABLED IN LOCKED UNITS AND ENABLED IN UN-LOCKED UNITS**	ENABLED; NOA WILL BE AVAILABLE REGARDLESS OF THE LOCKING OF THE UNIT	CFG8 R614 *1K_4
CFG9 NO SVID PROTOCOL CAPABLE VR CONNECTED	**VRS SUPPORTING SVID PROTOCOL ARE PRESENT**	NO VR SUPPORTING SVID IS PRESENT. THE CHIP WILL NOT GENERATE (OR RESPOND TO) SVID ACTIVITY	CFG9 R619 *1K_4
CFG10 SAFE MODE BOOT	**POWER FEATURES ACTIVATED DURING RESET**	POWER FEATURES (ESPECIALLY CLOCK GATINE ARE NOT ACTIVATED	CFG10 R295 *1K_4

Quanta Computer Inc.

PROJECT : ZRT/ZRTA

Size	Document Number	Rev
	Haswell 5/5 (CFG/GND)	3A

Date: Wednesday, February 11, 2015 Sheet 6 of 44

Haswell ULT PCH (PM)

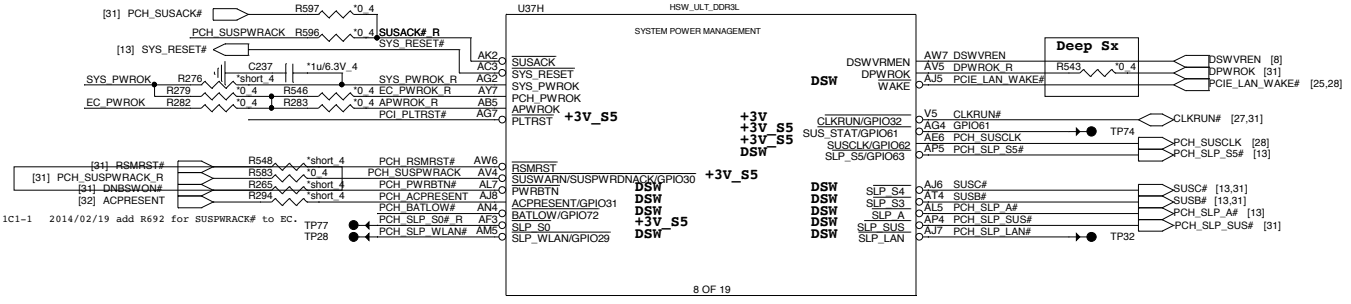

1C1-1 2014/02/19 add R692 for SUSPWRACK# to EC.

Power Sequence

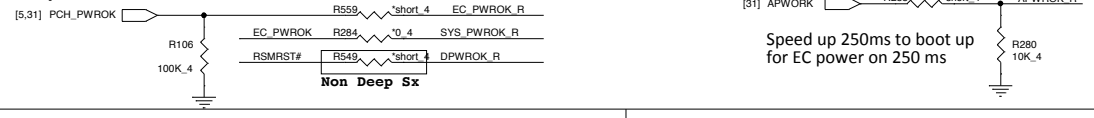

Speed up 250ms to boot up for EC power on 250 ms

PCH PM PU/PD

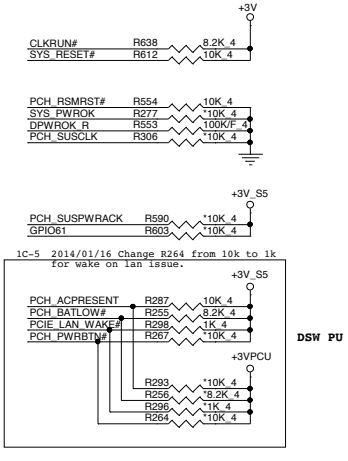

PLTRST# Buffer

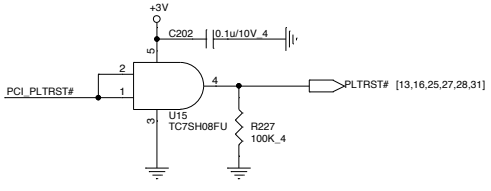

SYSPWOK

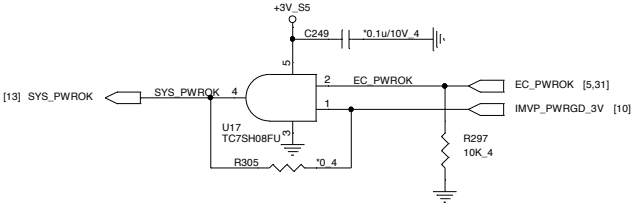

Deep Sx Circuit

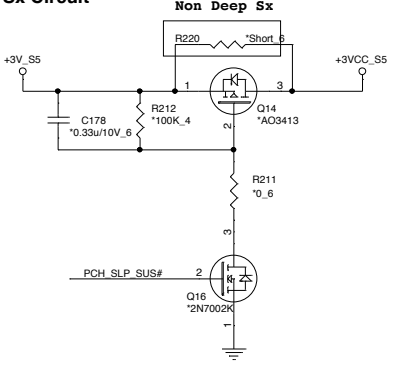

Quanta Computer Inc.		
PROJECT : ZRT/ZRTA		
Size	Document Number: LPT 1/6 (DMI/FDI/VGA)	Rev 3A
Date: Wednesday, February 11, 2015	Sheet 7 of 44	

RTC Clock 32.768KHz (RTC)

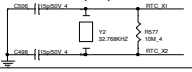

RTC Circuitry (RTC)

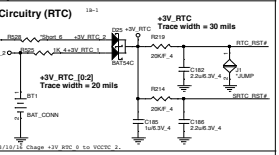

+3V_RTC_[0:2]
Trace width = 20 mils

+3V_RTC
Trace width = 30 mils

HDA

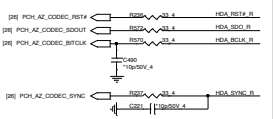

PCH JTAG

JTAG_TCK,JTAG_TMS
Trace Length < 9000mils

MP remove(Intel)

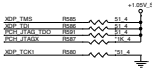

Haswell ULT PCH (RTC/HDA/SATA/SPI)

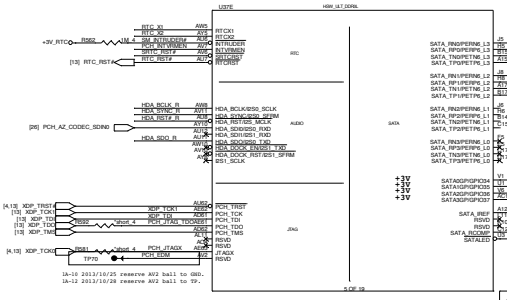

1A-10 2013/10/25 reserve AV2 ball to GND.
1A-12 2013/10/28 reserve AV2 ball to TP.

SATA_RCOMP
Impedance = 50 ohm
Trace length < 500 mils
Trace spacing = 15 mils

Haswell ULT PCH(LPC,SPI,SMBUS,C-LINK,THERMAL)

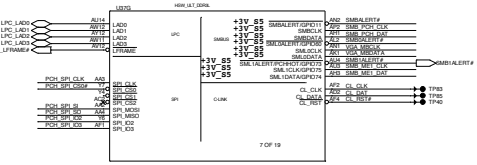

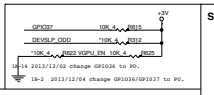

SMBus

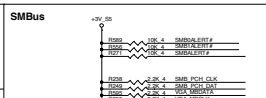

PCH SPI ROM(8M+4M)

15ohm CS01502JB12

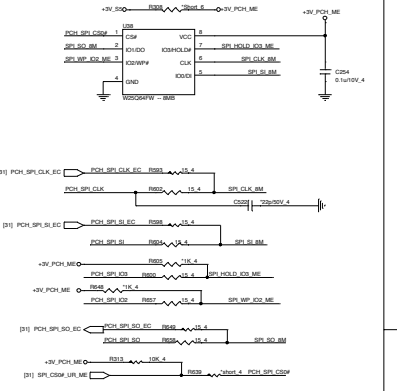

SMBus(PCH)

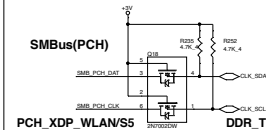

SMBus(EC)

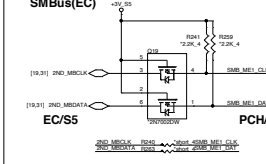

ULT Strapping Table

Pin Name	Strap description	Sampled	Configuration	note
GPIO81(SPKR)	No reboot on TCO Timer expiration	PWROK	**0 = Default enable (iPD 20K)** 1 =Disable No-Reboot mode	+3V R324 *1K_4 SPKR — SPKR [10,26]
HDA_SDO	Flash Descriptor Security Override / Intel ME Debug Mode	PWROK	**0 = Default can program ME (iPD 20K)** 1 =can't program ME	HDA_SDO_R R573 *short_4 — ME_WM# [31]
INTVRMEN	Integrated 1.05V VRM enable	ALWAYS	**1=Should be always pull-up**	+3V_RTC R545 *330K_4 PCH_INTVRMEN R559 *330K_4
GPIO86	Top-Block Swap override		**0 = Default disable (iPD 20K)** 1 = Enable TBS function	[10] GPIO86 +3V R355 *1K_4 GPIO86 R361 *1K_4
GPIO86	Boot BIOS Strap Bit		**0 = Default SPI (iPD 20K)** 1 =LPC	[10] GPIO86 +3V R343 *1K_4 GPIO86 R345 *1K_4
GPIO15	TLS(Transport layer security)		**0 = Default enable w/o confidentiality(iPD 20K)** 1 =Default enable with confidentiality	[10] GPIO15 +3V_S50 R317 *8.2K_4 GPIO15 R307 *1K_4
CFG4	DP presence strap		**0 = Enable an external display port is connected to the eDP** 1 =disable	[6,13] CFG4 — CFG4 R611 *1K_4
DSWVREN	Deep Sx well on die VR enable		**1=Should be always pull-up**	[7] DSWVREN +3V_RTC R567 *330K_4 DSWVREN R562 *330K_4

Quanta Computer Inc.

PROJECT : ZRT/ZRTA

Size	Document Number	Rev
	LPT 2/6 (SATA/HDA/SPI)	5A

Date: Wednesday, February 11, 2015 Sheet 5 of 45

Haswell ULT PCH (PCIE,USB3.0,USB2.0)

1A-6 2013/10/21 reversal PEG lan for layout.
1A-8 2013/10/21 Swap PEG to nomroal mode.

1A-1 2013/10/15 following up acer define and swap USB3 and USB2 port.

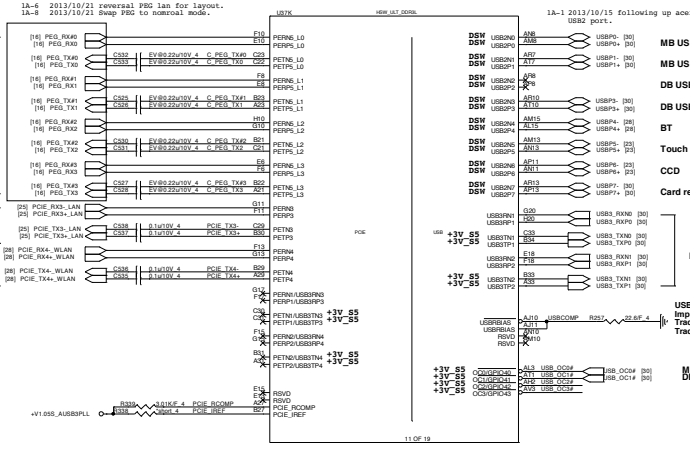

USBCOMP
Impedance = 50 ohm
Trace length < 500 mils
Trace spacing = 15 mils

USB Overcurrent

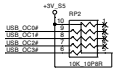

Haswell ULT PCH (CLOCK)

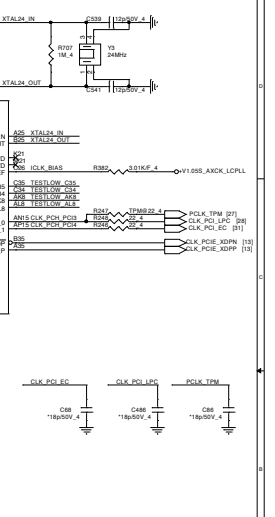

Quanta Computer Inc.			
PROJECT : ZRT/ZRTA			
Size	Document Number		Rev
	LPT 3/6 (PCIE/USB/CLK)		3A
Date: Wednesday, February 11, 2015	Sheet 9 of 44		

Haswell ULT PCH (GPIO,CPU/MISC,NCTF)

	High	Low
GPIO8	Touch panel	No touch panel

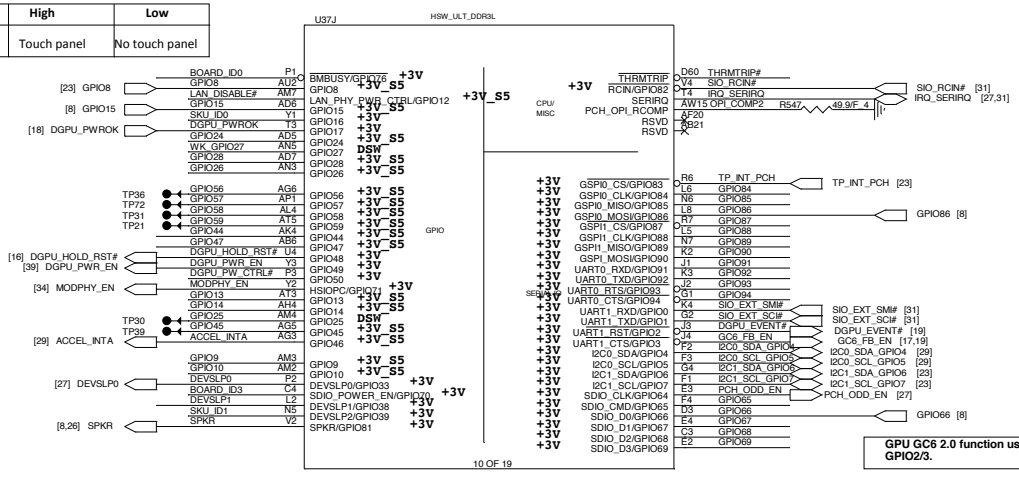

GPU GC6 2.0 function use GPIO2/3.

PCH GPIO PU/PD

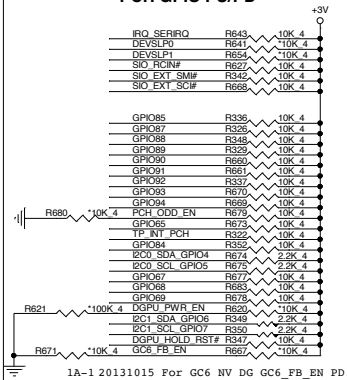

1A-1 20131015 For GC6 NV DG GC6_FB_EN PD.

1A-8 20131022 Change GPIO83/84 GPU GC6 pin to GPIO2/3.

1A-12 20131029 Change GPIO45 to PU S5, duble GPIO58 one is GPIO56.

high	UMA Only
low	GPU power is control by PCH GPIO (Discrete, SG or Optimize)

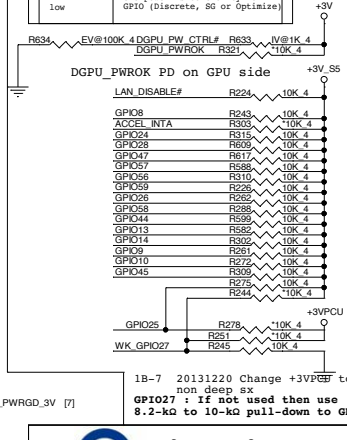

1B-7 20131220 Change +3VPCU to +3V_S5 non deep sx

GPIO27 : If not used then use 8.2-kΩ to 10-kΩ pull-down to GND.

Board ID

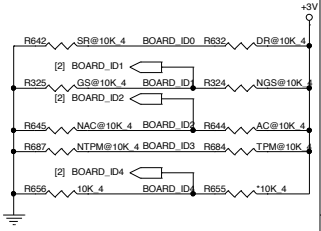

	Low	High
BOARD_ID0	single rank SKU	Dual rank SKU
BOARD_ID1	Reserved (Default)	Reserve
BOARD_ID2	No IOAC	IOAC
BOARD_ID3	No TPM	TPM
BOARD_ID4	Non-Dolly (Default)	Dolly

RAM ID

SKU ID

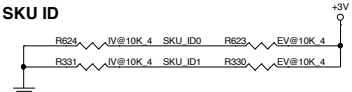

	SKU_ID1	SKU_ID0	VGA H/W Signal	Setup Menu	
UMA Only	0	0	UMA	Hidden	UMA boot
dGPU Only	0	1	GPU	Hidden	GPU boot
Switchable (Mux)	1	0	UMA+GPU	dGPU/SG	UMA boot
Optimize (Muxless)	1	1	UMA	UMA/SG	UMA boot

CPU thermal trip

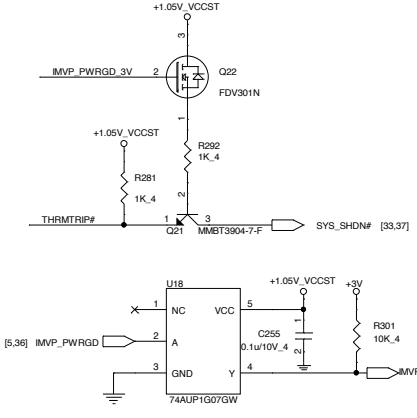

Quanta Computer Inc.
PROJECT : ZRT/ZRTA

Size	Document Number	Rev
	LPT 4/6 (GPIO/MISC)	3A

Date: Wednesday, February 11, 2015 Sheet 10 of 44

Haswell ULT PCH (Power)

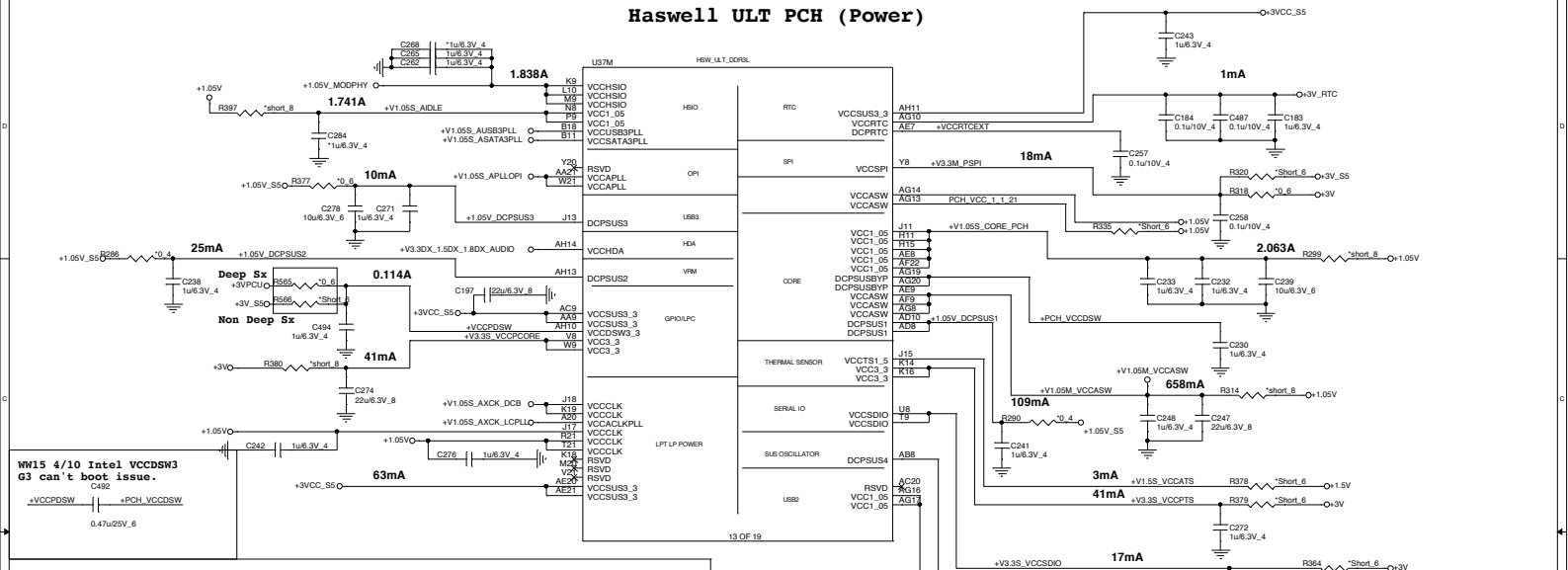

WW15 4/10 Intel VCCDSW3 G3 can't boot issue.

PCH VCCHSIO Power

1A-1 2013/10/11 del LDO change to MOS.

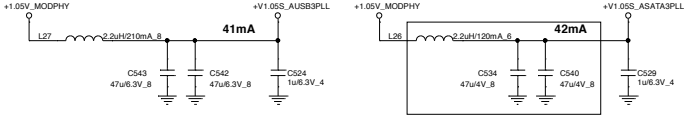

2013/10/31 PN change to H=0.85.L17 H=0.9

VCCAPLL power

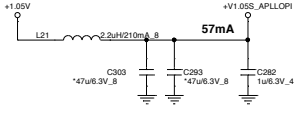

PCH HDA Power

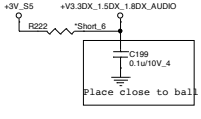

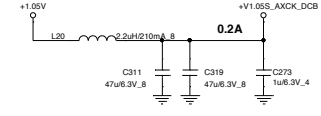

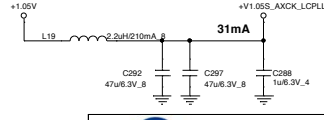

Quanta Computer Inc.

PROJECT : ZRT/ZRTA

Size	Document Number	Rev
	LPT 5/6 (POWER)	3A

Date: Wednesday, February 11, 2015 Sheet 11 of 44

Haswell ULT (GND)

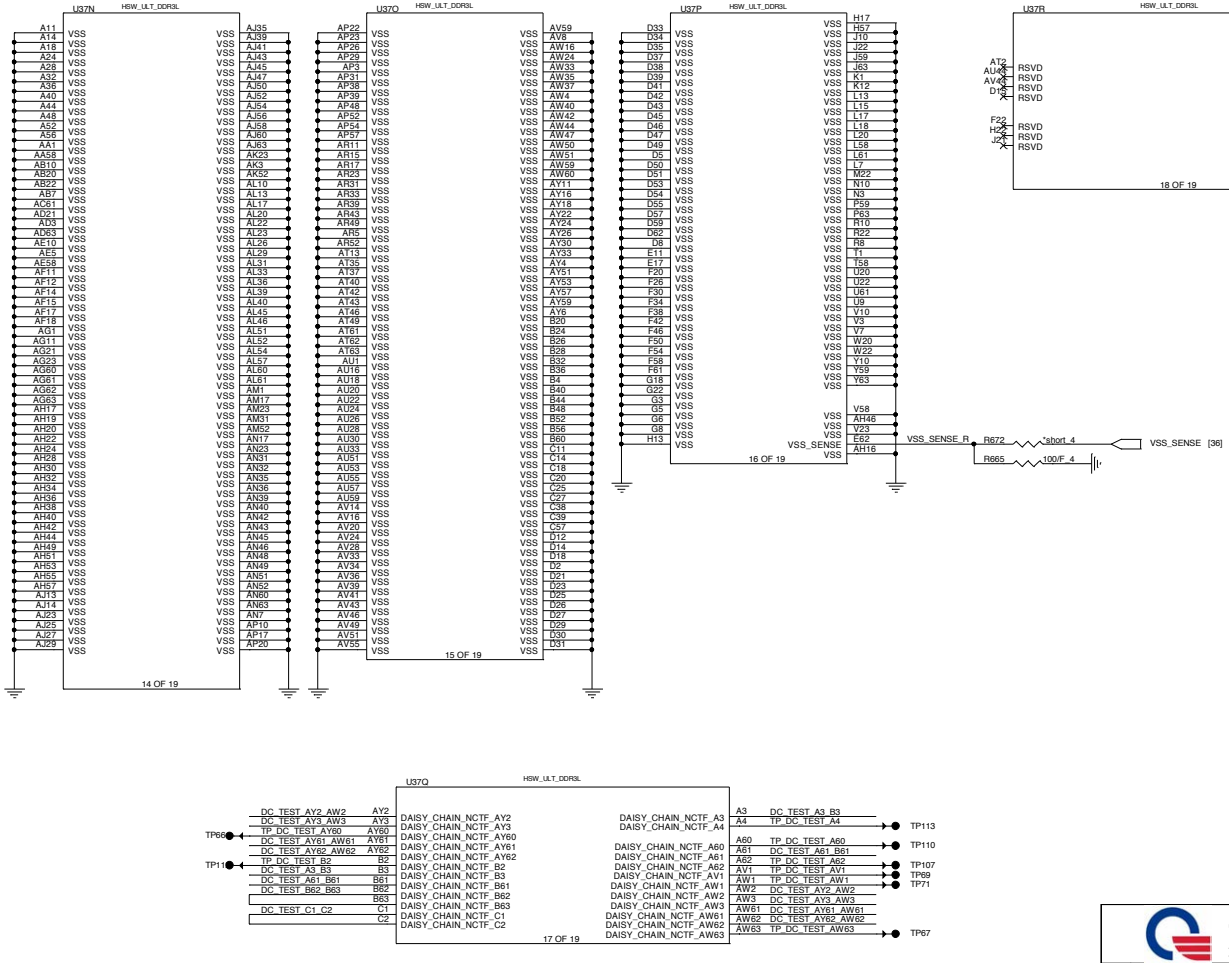

Quanta Computer Inc.

PROJECT : ZRT/ZRTA

Size	Document Number	Rev
	LPT 6/6 (GND)	3A

Date: Wednesday, February 11, 2015 Sheet 12 of 44

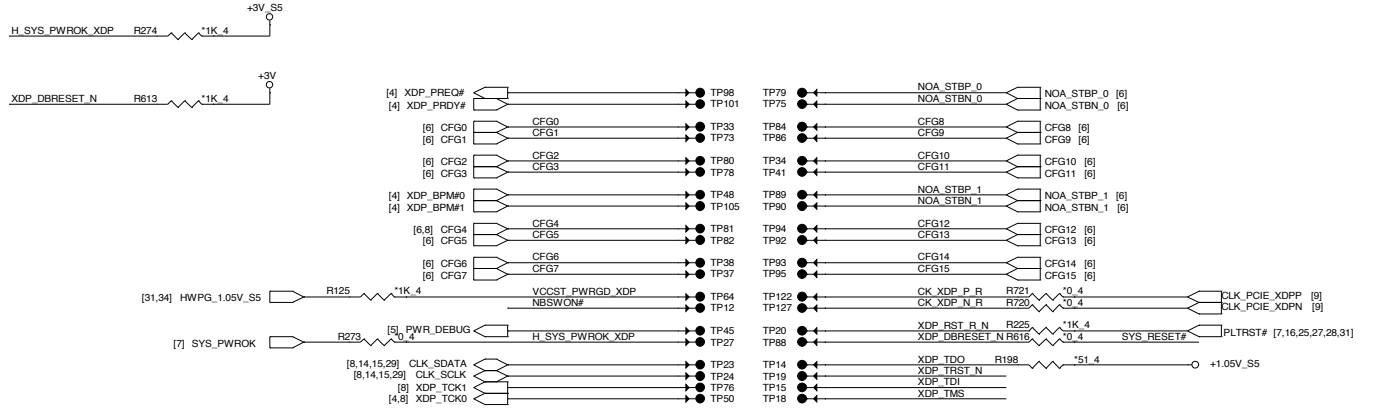

APS

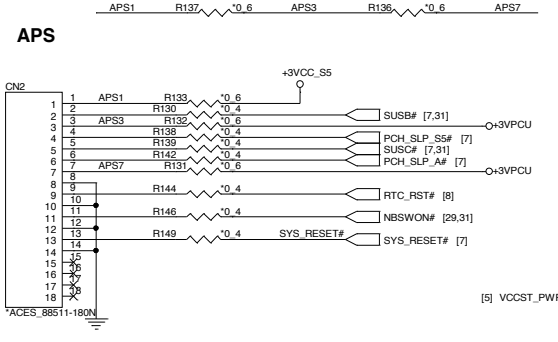

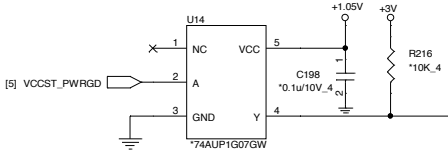

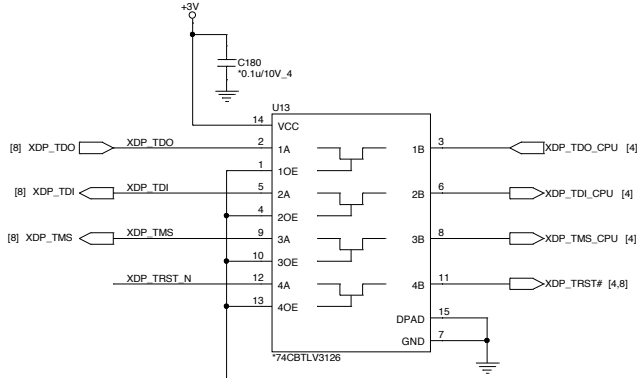

Quanta Computer Inc.

PROJECT : ZRT/ZRTA

Size	Document Number	Rev
	CPU/PCH XDP	3A

Date: Wednesday, February 11, 2015 Sheet 13 of 44

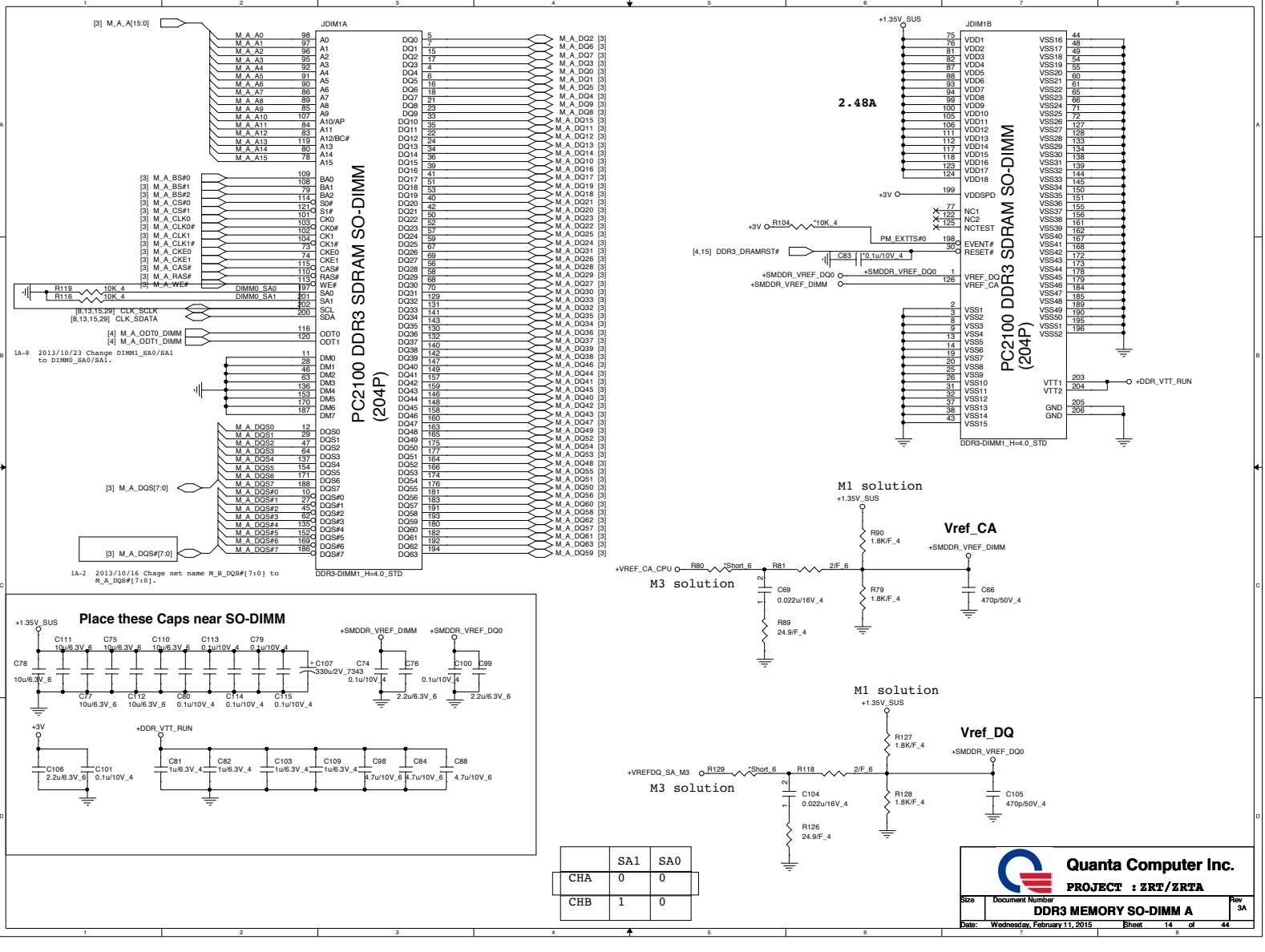

	SA1	SA0
CHA	0	0
CHB	1	0

Quanta Computer Inc.

PROJECT : ZRT/ZRTA

Size	Document Number	Rev
	DDR3 MEMORY SO-DIMM A	3A

Date: Wednesday, February 11, 2015 Sheet 14 of 44

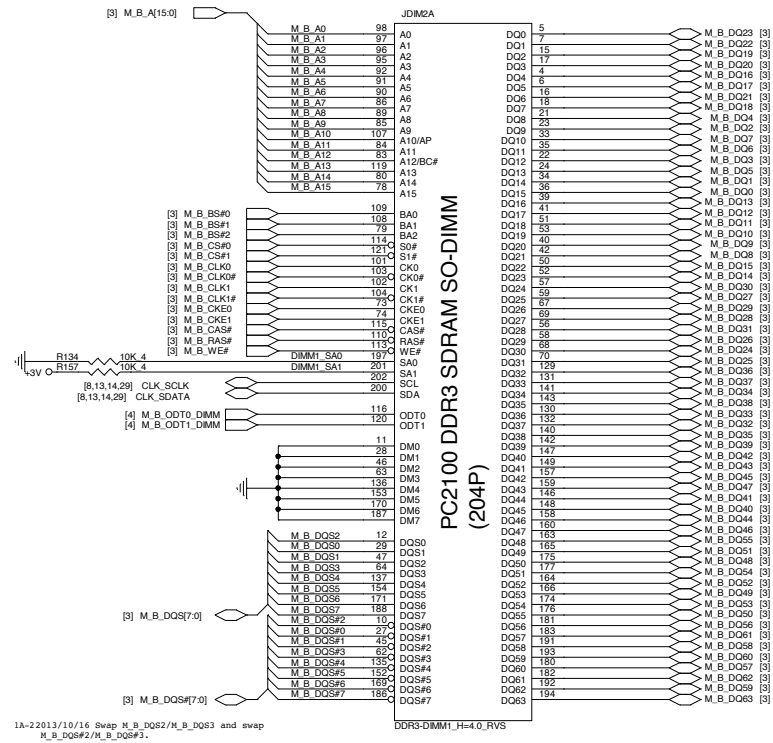

1A-22013/10/16 Swap M_B_DQS2/M_B_DQS3 and swap M_B_DQS#2/M_B_DQS#3.

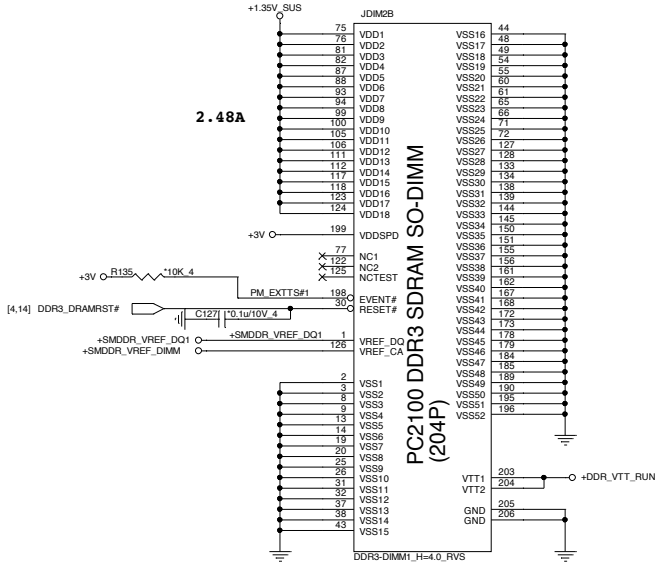

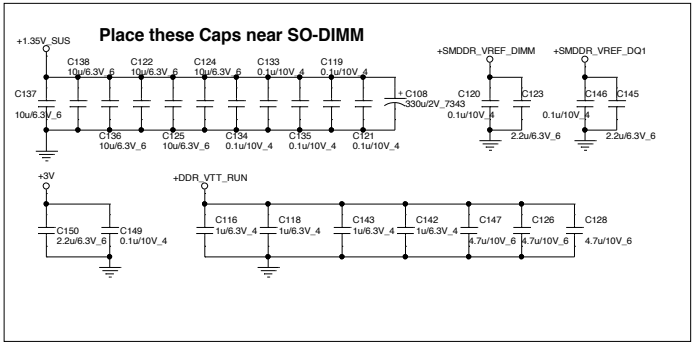

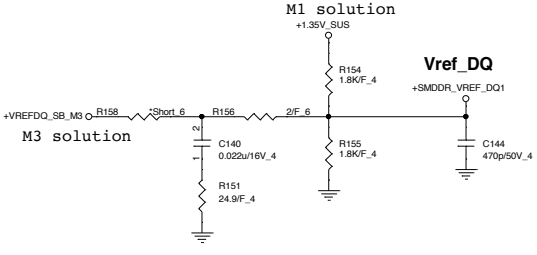

	SA1	SA0
CHA	0	0
CHB	1	0

Quanta Computer Inc.

PROJECT : ZRT/ZRTA

Size	Document Number	Rev
	DDRIII Memory SO-DIMM B	3A

Date: Wednesday, February 11, 2015 Sheet 15 of 44

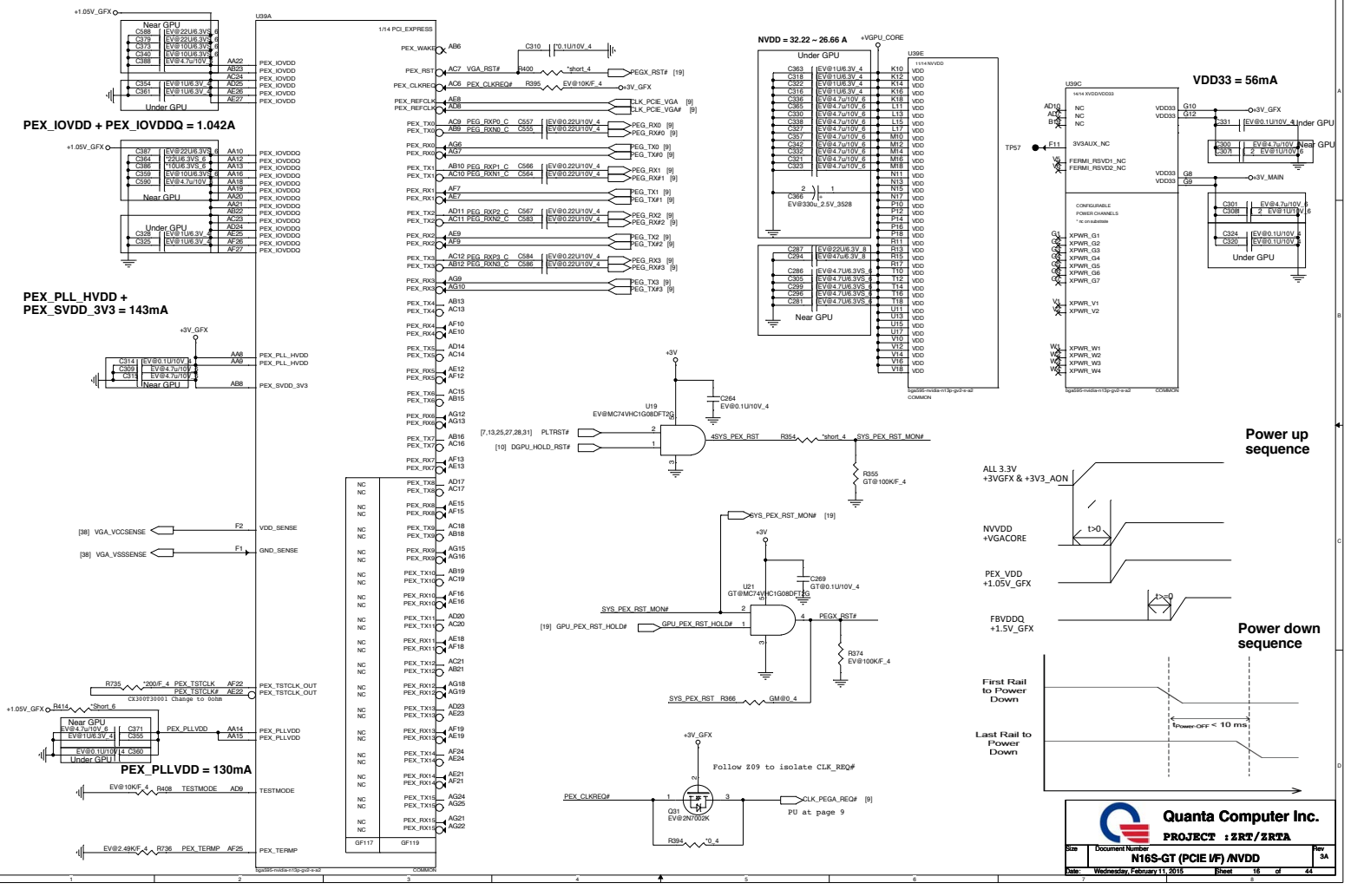
PEX_IOVDD + PEX_IOVDDQ = 1.042A
PEX_PLL_HVDD +
PEX_SVDD_3V3 = 143mA
PEX_PLLVDD = 130mA
NVDD = 32.22 ~ 26.66 A
VDD33 = 56mA
Power up sequence
Power down sequence
ALL 3.3V
+3VGFX & +3V3_AON
NVVDD
+VGACORE
PEX_VDD
+1.05V_GFX
FBVDDQ
+1.5V_GFX
First Rail to Power Down
Last Rail to Power Down
Quanta Computer Inc.
PROJECT : ZRT/ZRTA
N16S-GT (PCIE I/F) /NVDD
Size
Document Number
Rev
3A
Date: Wednesday, February 11, 2015
Sheet 16 of 44

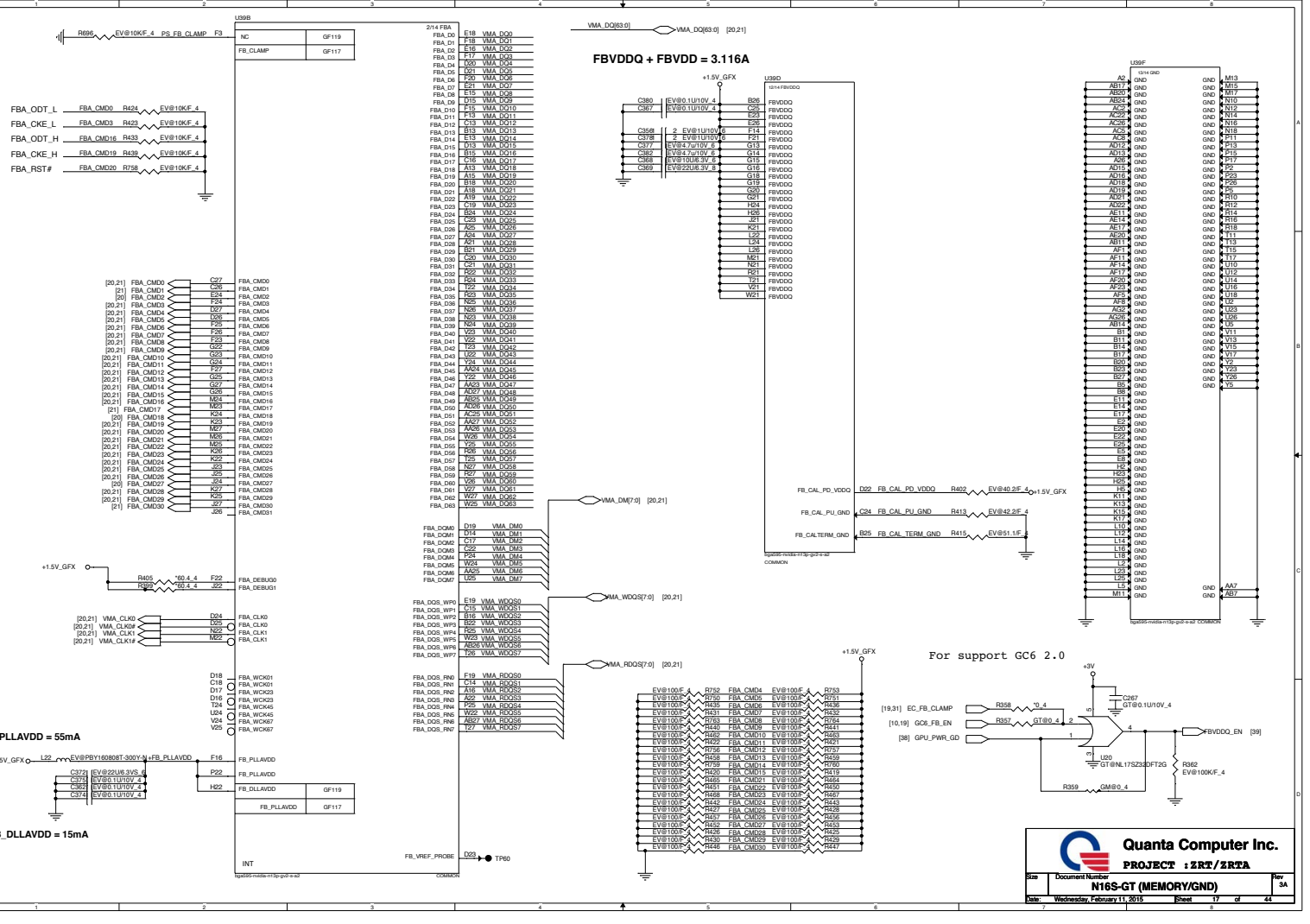

Quanta Computer Inc.

PROJECT : ZRT/ZRTA

Size	Document Number	Rev
	N16S-GT (MEMORY/GND)	3A

Date: Wednesday, February 11, 2015 Sheet 17 of 44

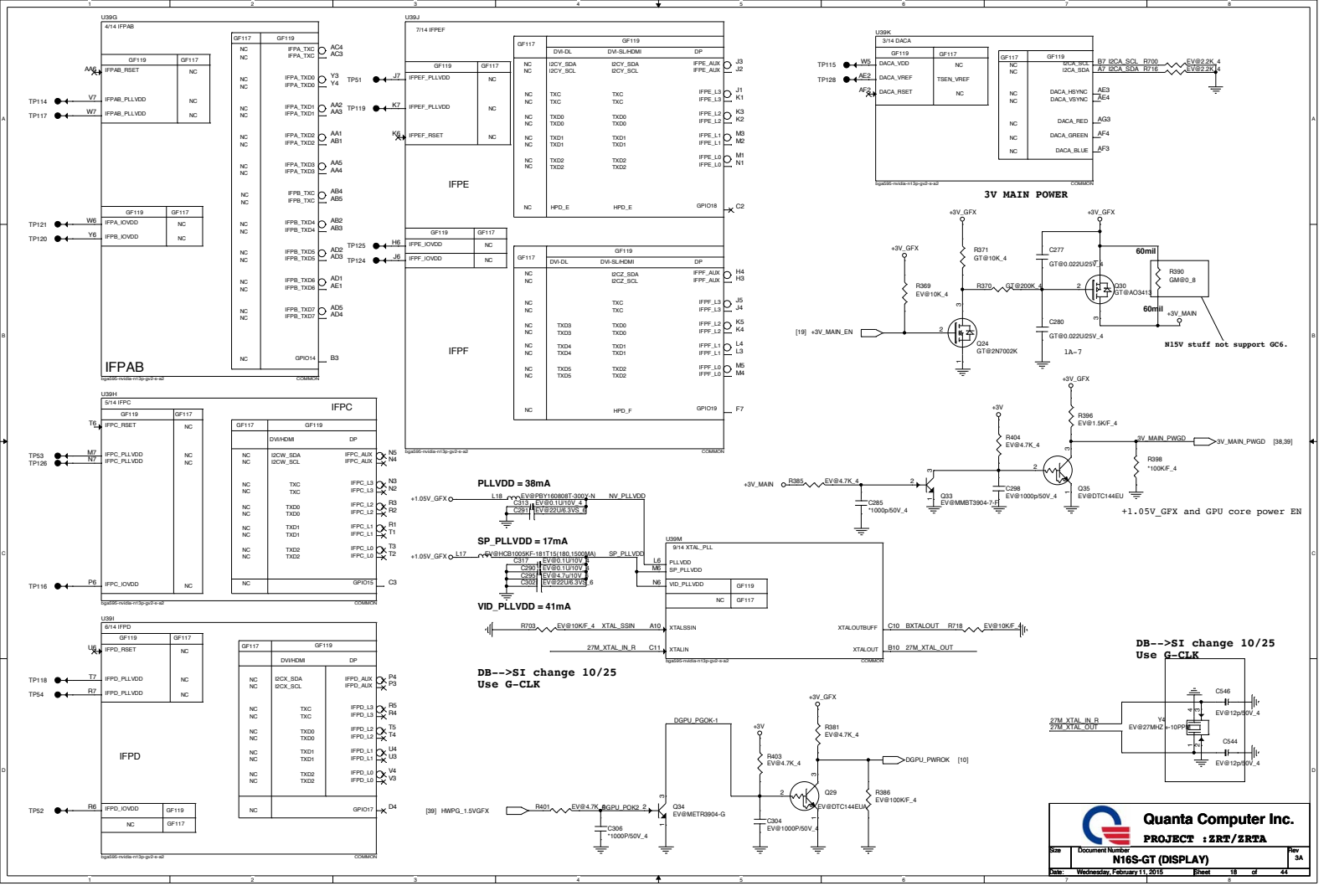
U39G
4/14 IFPAB
IFPAB
U39J
7/14 IFPEF
IFPE
IFPF
U39K
3/14 DACA
3V MAIN POWER
N15V stuff not support GC6.
U39H
5/14 IFPC
IFPC
PLLVDD = 38mA
SP_PLLVDD = 17mA
VID_PLLVDD = 41mA
U39M
9/14 XTAL_PLL
DB-->SI change 10/25
Use G-CLK
+1.05V_GFX and GPU core power EN
U39I
6/14 IFPD
IFPD
DB-->SI change 10/25
Use G-CLK
Quanta Computer Inc.
PROJECT : ZRT/ZRTA
Size
Document Number
N16S-GT (DISPLAY)
Rev
3A
Date: Wednesday, February 11, 2015
Sheet 18 of 44

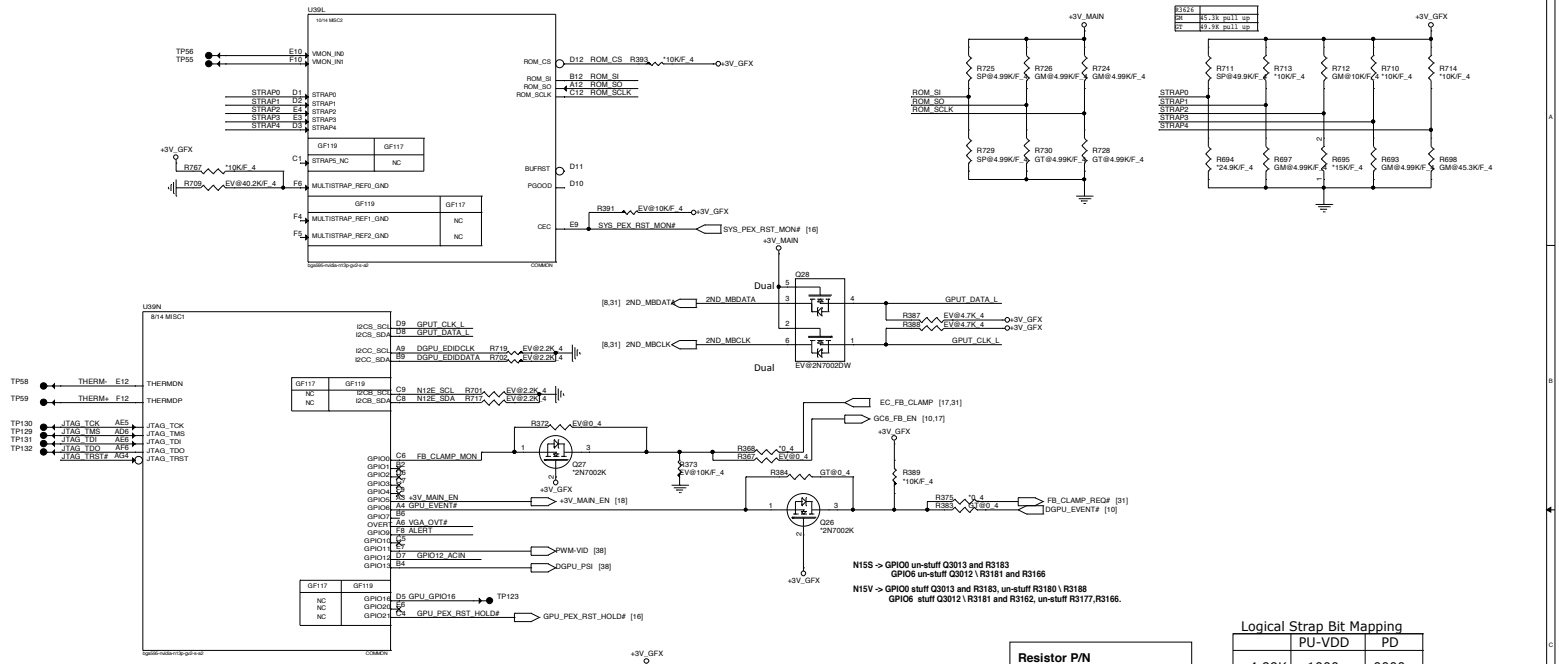

N16S-GS/N16V-GM Straping table

ROM_SI N16S	
2G Hynix 128Mx16	-->34.8K PD
2G Micron 128Mx16	-->45.3K PD
2G Samsumg 128Mx16	-->4.99K PU
4G Hynix 256Mx16	-->4.99K PD
4G Micron 256Mx16	-->10K PD
4G Samsumg 256Mx16	-->15K PD
ROM_SI N16V	
2G Hynix 128Mx16	-->20K PD
2G Micron 128Mx16	-->30.1K PD
2G Samsumg 128Mx16	-->34.8K PD
4G Micron 256Mx16	-->10K PD
4G Hynix 256Mx16	-->15K PD
4G Samsumg 256Mx16	-->24.9K PD

Resistor P/N
4.99K---> CS24992FB26
10K ---> CS31002FB26
15K ---> CS31502FB24
20K ---> CS32002FB29
24.9K --->CS32492FB16
30.1K --->CS33012FB18
34.8K---> CS33482FB22
45.3K ---> CS34532FB18 GM
49.9K ---> CS34992FB10 GT

ROM_SO	ROM_SCLK	STRAP0
N16S-GT --> 4.99K PD	N16S-GT --> 4.99K PD	N16S-GT --> 49.9K PU
N16V-GM --> 4.99K PU	N16V-GM --> 4.99K PU	N16V-GM --> 45.3K PU

Logical Strap Bit Mapping

	PU-VDD	PD
4.99K	1000	0000
10K	1001	0001
15K	1010	0010
20K	1011	0011
24.9K	1100	0100
30.1K	1101	0101
34.8K	1110	0110
45.3K	1111	0111

N16V-GM strap0-3 table

STRAP0 = Stuff 45.3k pull up. (EDID Panel)

STRAP1 = Stuff 4.99k pull down.(Gen3 support)

STRAP2 = Stuff 10k pull up.(DID 0x1299)

STRAP3 = Stuff 4.99k pull down.(No display out)

STRAP4 = Stuff 45.3k pull down. (Gen3/max speed)

Quanta Computer Inc.
PROJECT : ZRT/ZRTA

Size	Document Number	Rev
	N16S-GT (GPIO/STRAPS)	3A

Date: Wednesday, February 11, 2015 Sheet 19 of 44

NYU 256Mx16, H5TC4063AFR-11C QBC PN : AKD5PGWT003---TOP B/S PN : AKD5PGEST002
HIC 256Mx16, MT41J256M16HA-093G:E QBC PN : AKD5PEEST001---TOP B/S PN : AKD5PGEST001
SAM 256Mx16, K4W4G164QB-BC1A QBC PN : AKD5PGWT501---TOP B/S PN : AKD5PGWT502

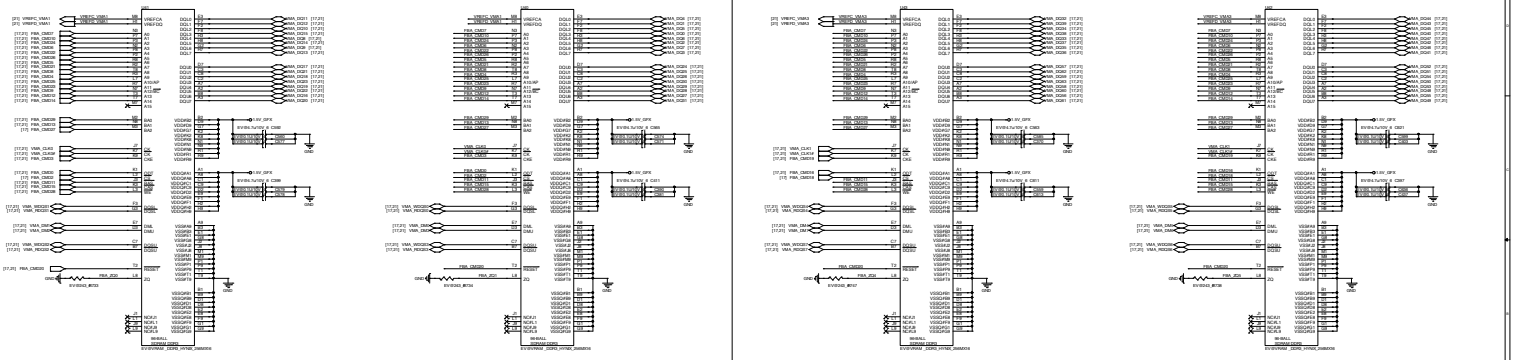

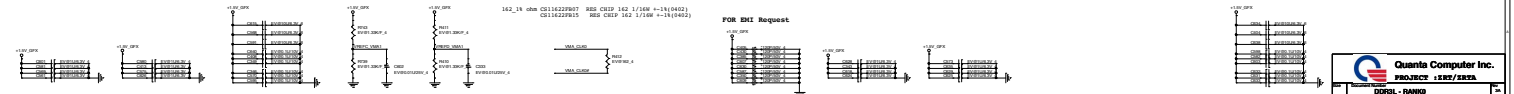

162_1% ohm CS116225F807 RES CHIP 162 1/16W +-1%(0402)
CS116225F815 RES CHIP 162 1/16W +-1%(0402)

FOR EMI Request

Quanta Computer Inc.
PROJECT :ERZ/ERZA
Size Document Number Rev
DDR3L - RANK0
Date: Wednesday, February 11, 2015 Sheet 36 of 49

MTU 256Mx16, M59C4063AF8-11C QBC PN : AKD5PGWTN00---TOP B/S PN : AKD5PGWTN07
MIC 256Mx16, M5X12256G16BA-DT3G:E QBC PN : AKD5PSEFL01---TOP B/S PN : AKD5PSEFL02
SAM 256Mx16, K4N46164GB-BC1A QBC PN : AKD5PGNTS01---TOP B/S PN : AKD5PGNTS02

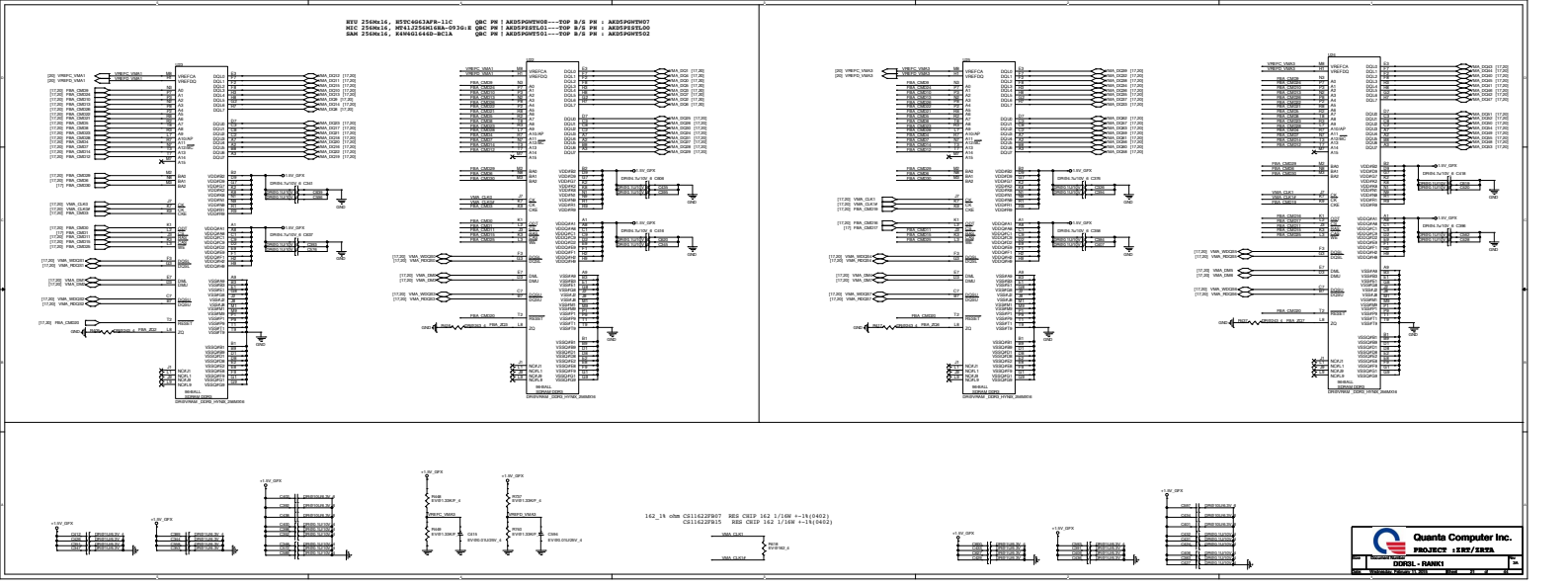

DP TO VGA

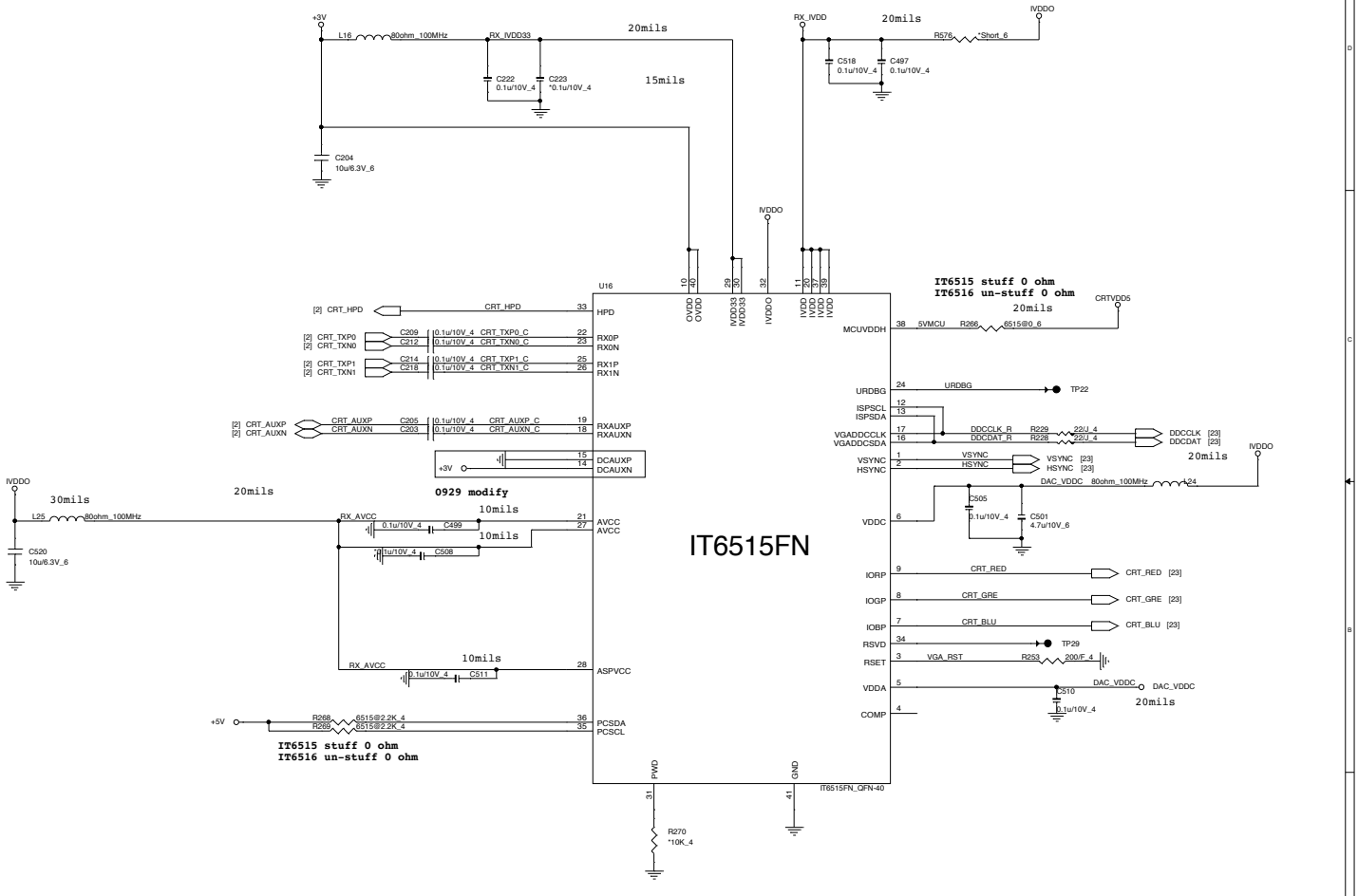

Quanta Computer Inc.

PROJECT : ZRT/ZRTA

Size	Document Number	Rev
	DP to VGA IT6165	3A

Date: Wednesday, February 11, 2015 Sheet 22 of 44

CRT

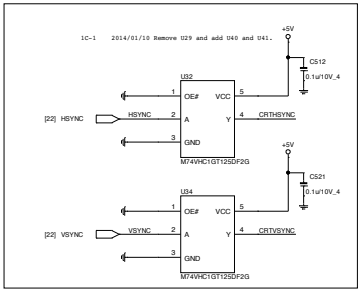

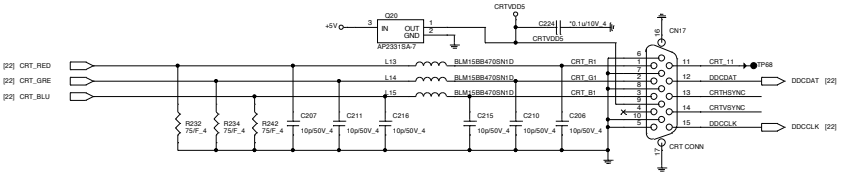

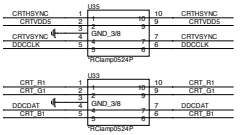

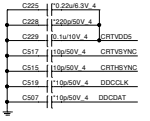

Power trace tracking

[2,5,7,8,9,10,11,13,14,15,16,17,18,22,24,25,26,27,28,29,30,31,33,34,35,36,37,38,39] +3V
[22,24,26,27,29,33,37] +5V
[7,8,10,11,13,25,26,27,28,29,31,32,33,37,38,39] +3VPCU
[27,29,32,33,34,35,36,37,38,39] VIN

LCD CONNECTOR

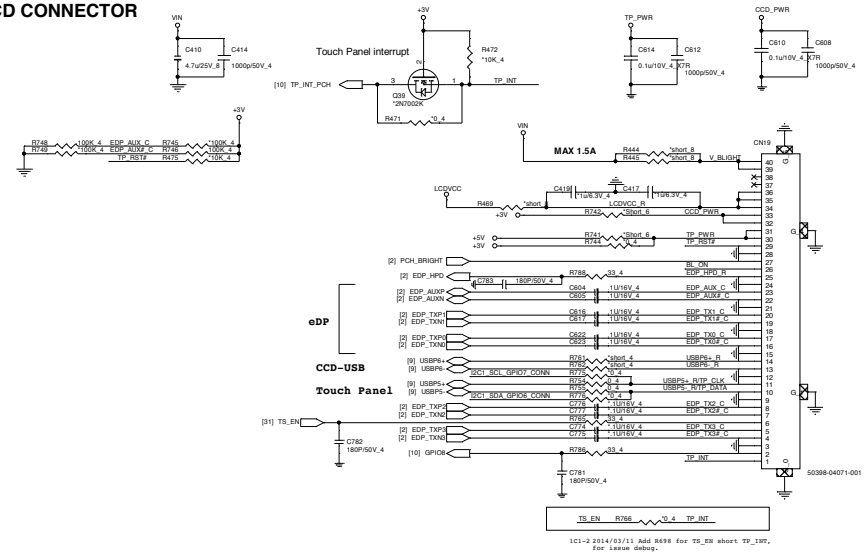

LCD Power

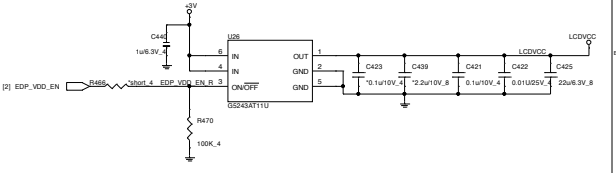

Touch screen level shift I2C(reserve)

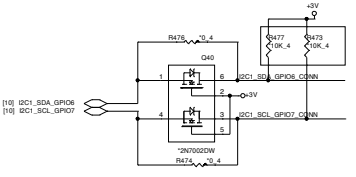

TPD->100kHz,TS=400Khz
Intel design guide suggestion
MCP PIN 10u.
Per inch 3u TS=3x5inch
400kHz10~100u =2.4~0.4k.
100Khz 10~100u=9k~1k.

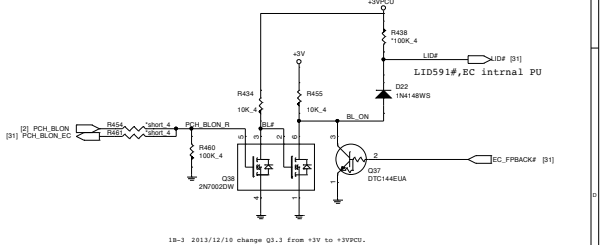

Hall Sensor (HSR)

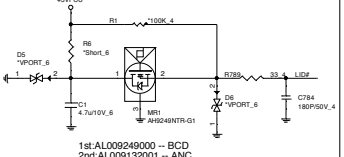

1st:AL009249000 -- BCD
2nd:AL009132001 -- ANC

Quanta Computer Inc.			
PROJECT : ZRT/ZRTA			
Size	Document Number		Rev 1A
	CRT/LVDS/CAMERA/LID		
Date: Wednesday, February 11, 2015	Sheet 23 of 44		

HDMI

From PCH

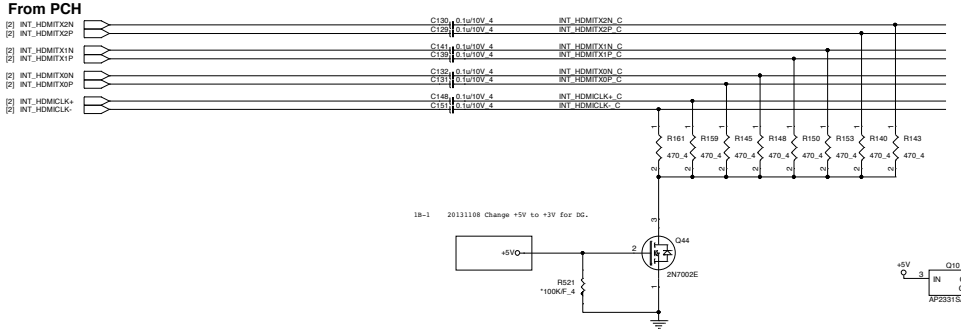

HDMI connector

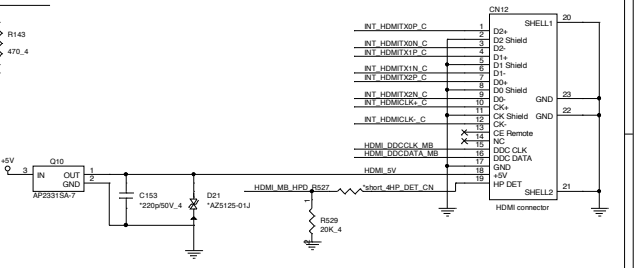

HDMI-detect

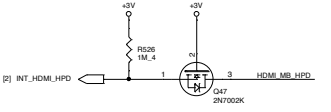

I2C

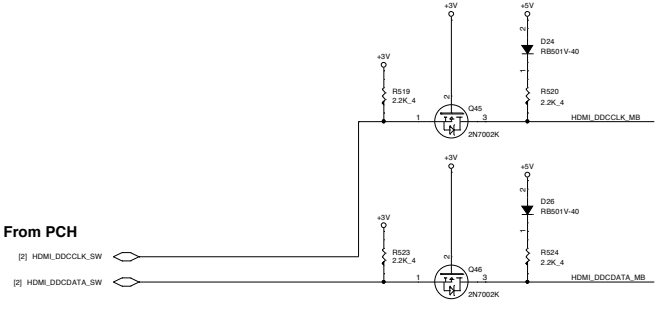

EMI

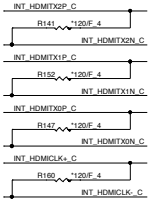

Power trace tracking

[2,5,7,8,9,10,11,13,14,15,16,17,18,22,23,25,26,27,28,29,30,31,33,34,35,36,37,38,39] +3V
[22,23,26,27,29,33,37] +5V

Quanta Computer Inc.		
PROJECT : ZRT/ZRTA		
Size	Document Number	Rev
	HDMI (PS8101)	1A
Date: Wednesday, February 11, 2015	Sheet 24 of 44	

LAN

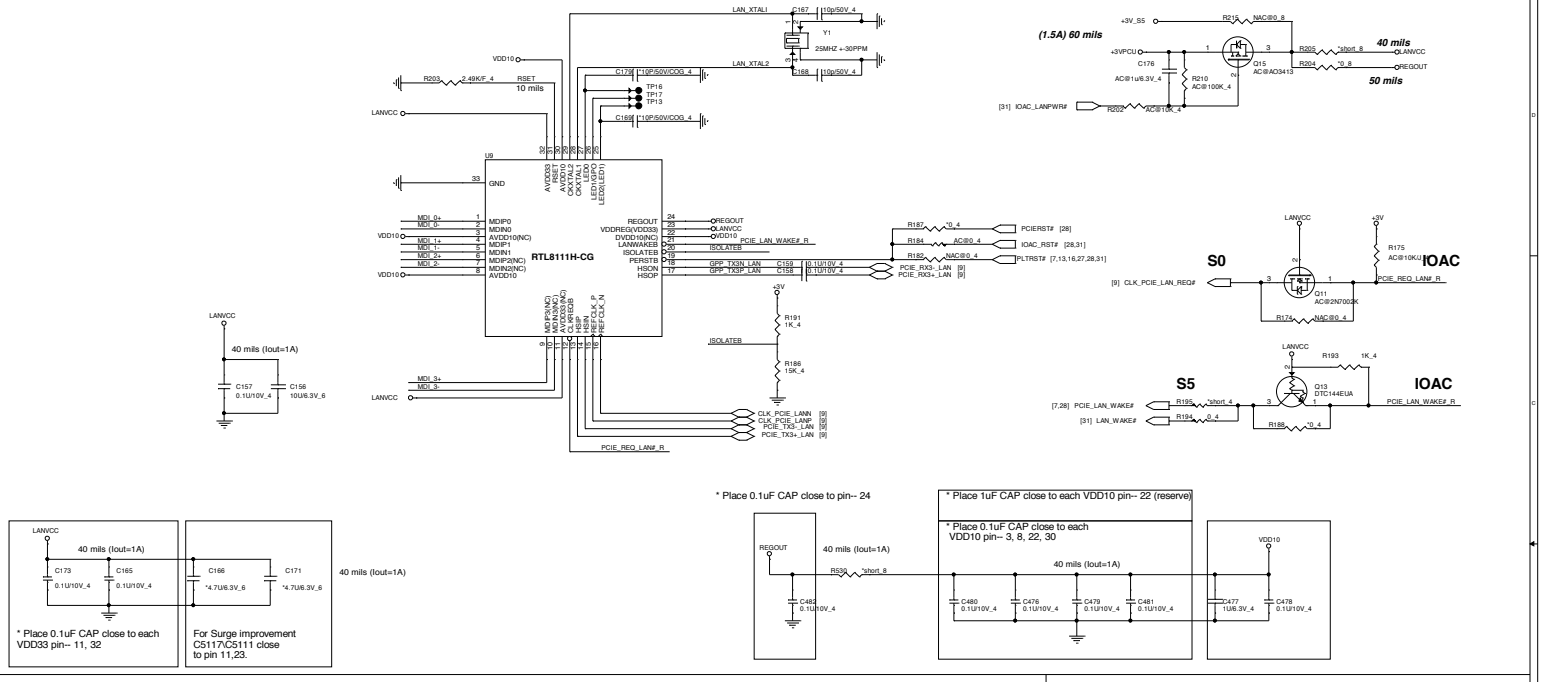

Tramsformer

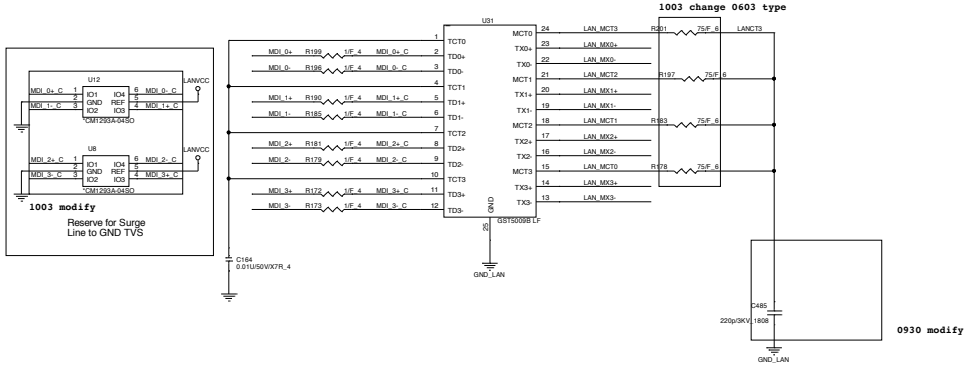

1003 change 0603 type

RJ45 Connector

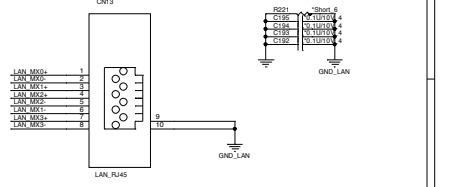

Power trace tracking

[2,5,7,8,9,10,11,13,14,15,16,17,18,22,23,24,26,27,28,29,30,31,33,34,35,36,37,38,39] +3V
[5,7,8,9,10,11,13,27,29,31,33,36,38] +3V_S5
[7,8,10,11,13,23,26,27,28,29,31,32,33,37,38,39] +3VPCU

Quanta Computer Inc.

PROJECT :ZRT/ZRTA

Size	Document Number	Rev
	LAN (RTL8111GS)	1A

Date: Wednesday, February 11, 2015 Sheet 25 of 44

Codec(ADO)

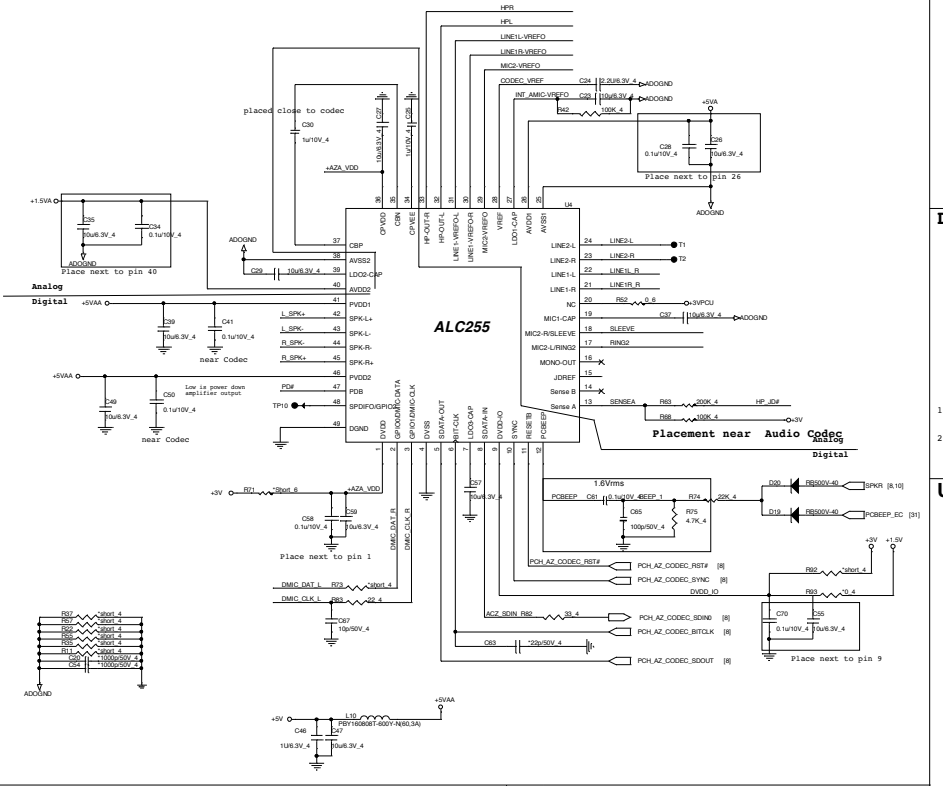

Grounding circuit(ADO)

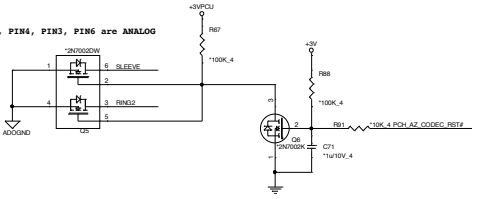

D-Mic

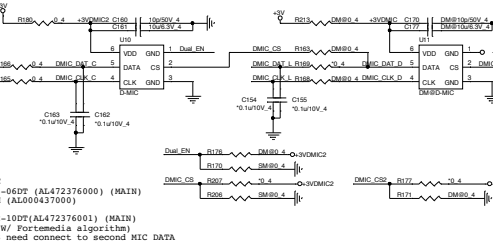

1.Single DMIC
KMM47237626-06DT (AL472376000) (MAIN)
SPM0437HD4H (AL000437000)
2.Dual DMIC
KMM47237622-10DT(AL472376001) (MAIN)
NSM0410DT (W/ Fortemedia algorithm)
Main MIC CS need connect to second MIC DATA

Universal Audio Jack

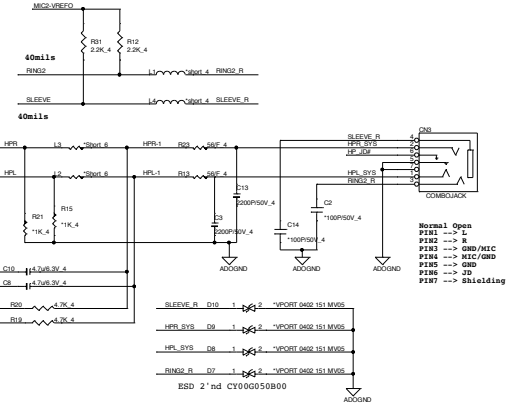

Normal Open
PIN1 --> L
PIN2 --> R
PIN3 --> GND/MIC
PIN4 --> MIC/GND
PIN5 --> GND
PIN6 --> JD
PIN7 --> Shielding

Codec PWR 5V(ADO)

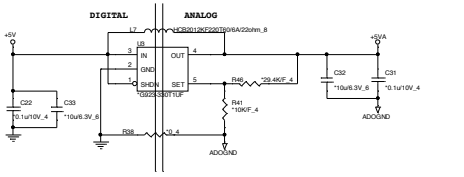

Mute(ADO)

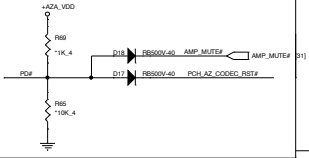

Internal Speaker

40mil for each signal

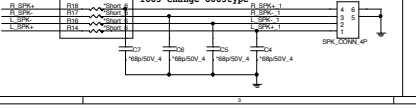

Codec PWR 3V/1.5V(ADO)

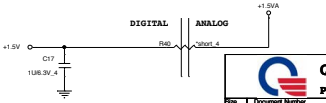

Quanta Computer Inc.

PROJECT : ZRT/ZRTA

Size	Document Number	Rev
	ALC283/HP/SPK	3B

Date: Wednesday, February 11, 2015 Sheet 26 of 44

2.5" SATA HDD (HDD)

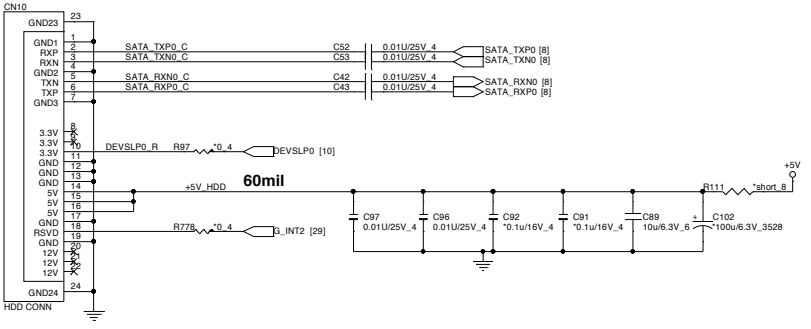

SATA ODD Connector(ODD)

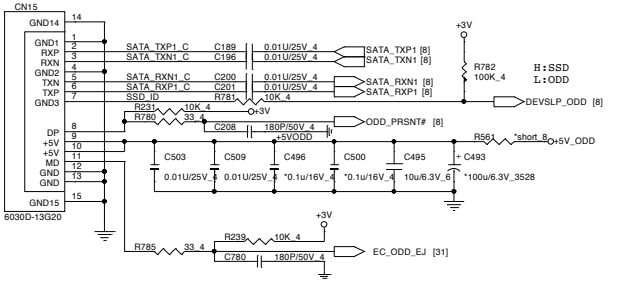

ODD Power (ODD)

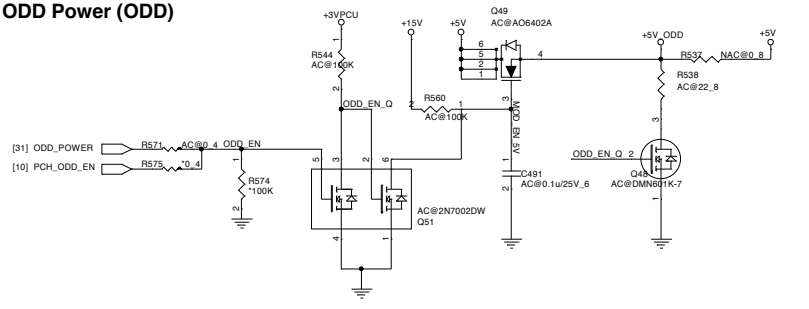

EMI

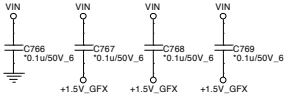

TPM NPCT650 (TPM)

TPMM 1.2	AL009655X01
TPMM 2.0	AL000650X01

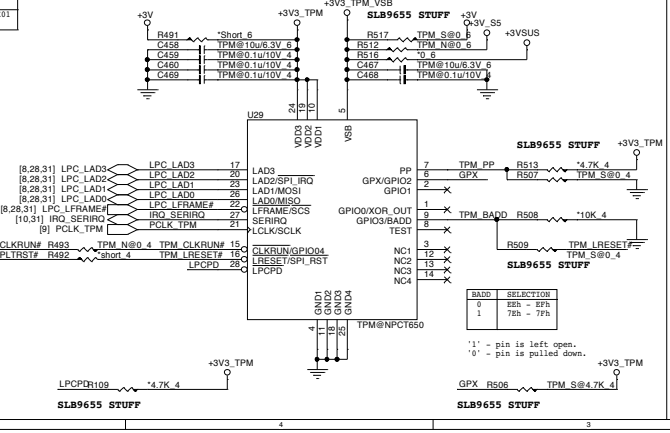

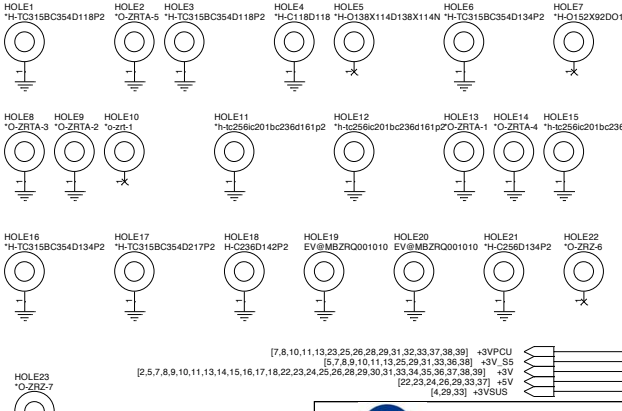

Quanta Computer Inc.

PROJECT : ZRT/ZRTA

Size	Document Number	Rev
	HDD/ODD/TPM NPCT650	1A

Date: Wednesday, February 11, 2015 Sheet 27 of 44

NGFF WiFi & BT (NGF)

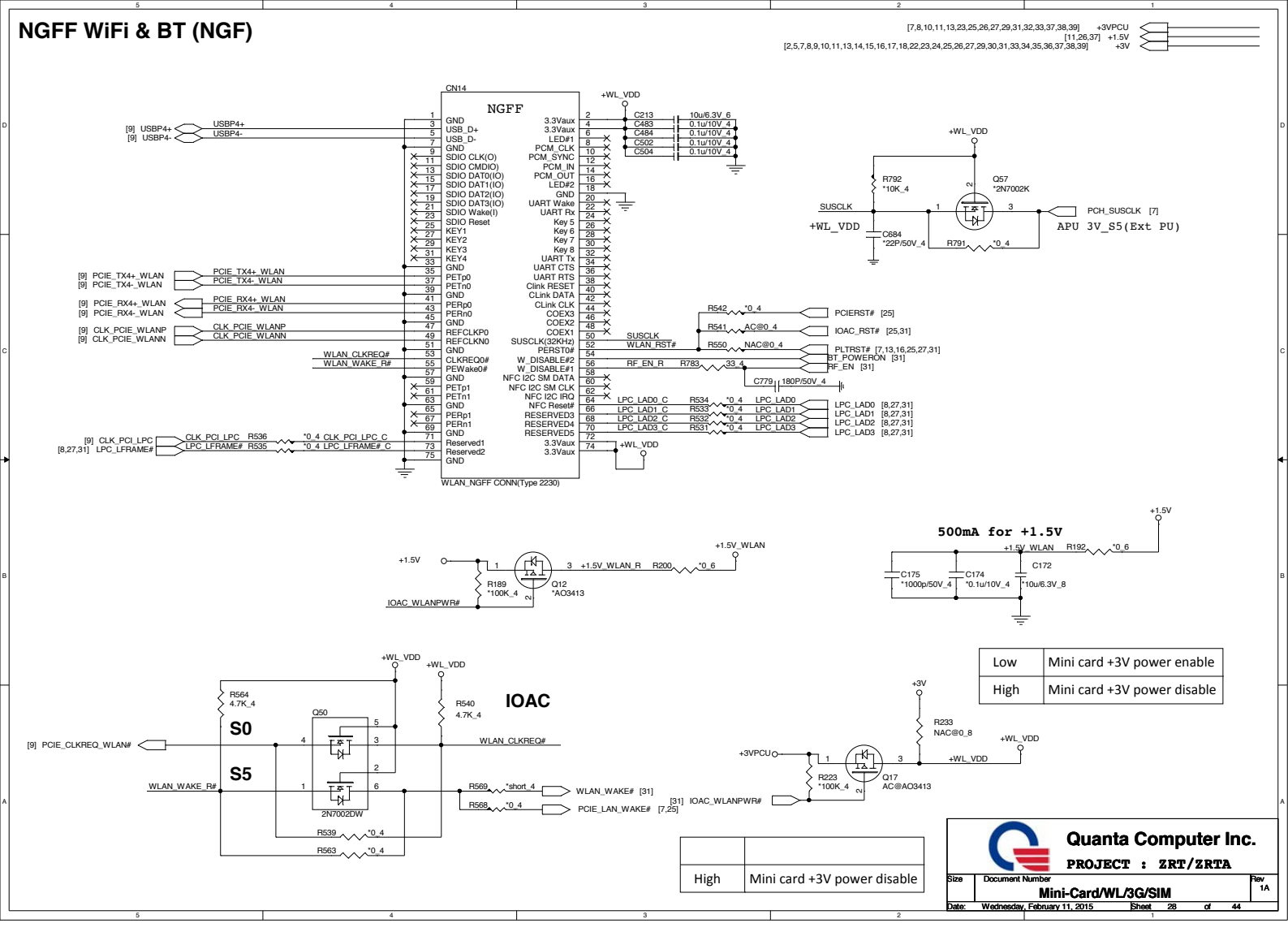

Low	Mini card +3V power enable
High	Mini card +3V power disable

High	Mini card +3V power disable

Quanta Computer Inc.

PROJECT : ZRT/ZRTA

Size	Document Number	Rev
	Mini-Card/WL/3G/SIM	1A

Date: Wednesday, February 11, 2015 Sheet 28 of 44

K/B (KBC)

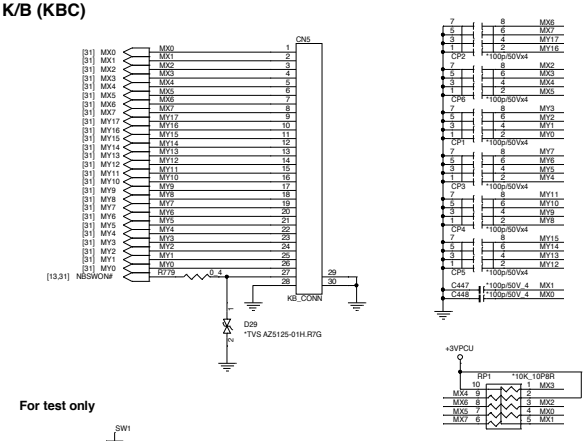

For test only

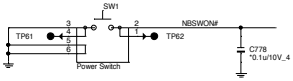

KB_BL LED (KBL)

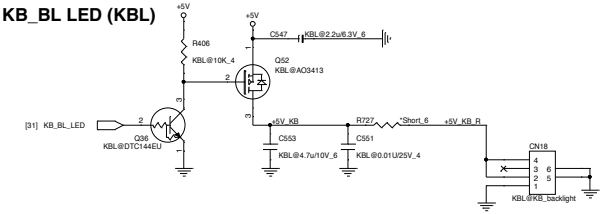

G-sensor(ACS)

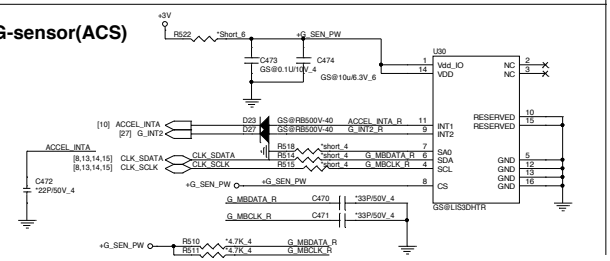

TOUCHPAD BOARD CONN (TPD I2C/PS2 co-lay)

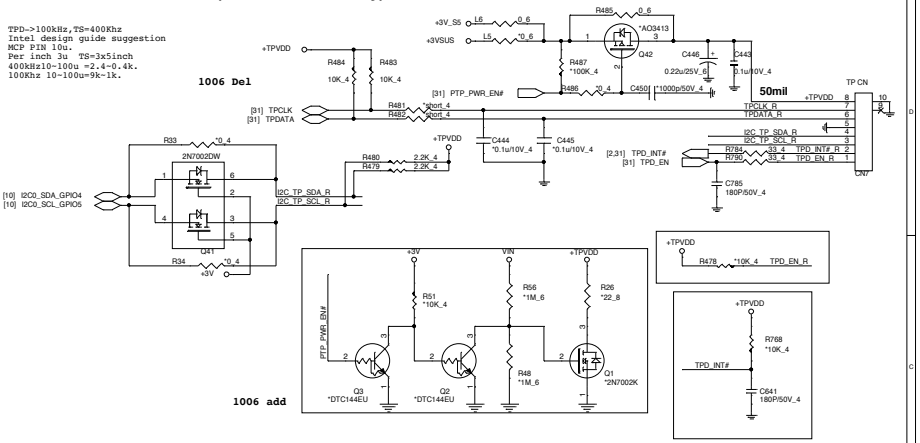

CPU FAN (THM)

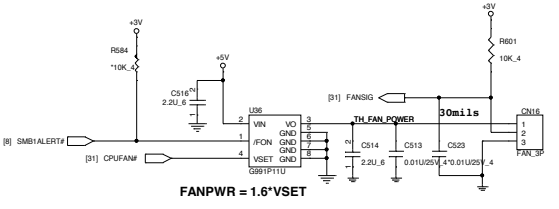

POWER LED(UIF)

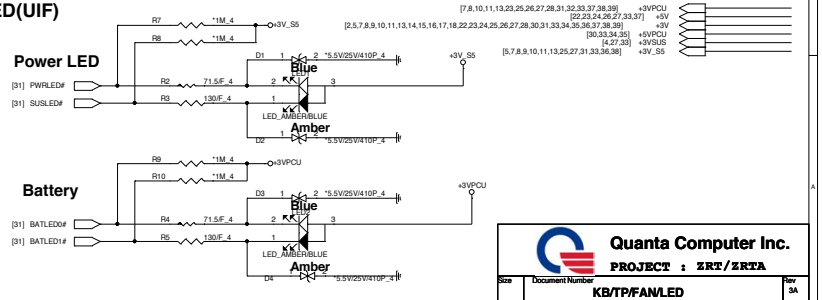

Quanta Computer Inc.

PROJECT : ZRT/ZRTA

Size	Document Number	Rev
	KB/TP/FAN/LED	3A

Date: Wednesday, February 11, 2015 Sheet 29 of 44

USB 3.0 Connector(UB3)

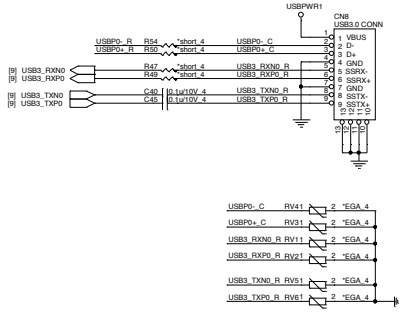

USB Charger for USB3.0 Port0 (UBC)

Table 2. Truth Table

CTL1	CTL2	CTL3	ILIM_SEL	MODE	Current Limit Setting	Status Output	Notice
0	0	0	0	Discharge	NA	OFF	OUT held low
0	0	0	1	Discharge	NA	OFF	
0	0	1	0	DCP_Auto	ILIM_HI	OFF	Data lines disconnected
0	0	1	1	DCP_Auto	ILIM_HI	DCP	Data lines disconnected Load Detect function active
0	1	0	0	SDP1	ILIM_LO	OFF	Data lines connected
0	1	0	1	SDP1	ILIM_HI	OFF	
0	1	1	0	DCP_Auto	ILIM_LO	OFF	Data lines disconnected
0	1	1	1	DCP_Auto	ILIM_HI	DCP	Data lines disconnected Load Detect function active
1	0	0	0	DCP_Shorted	ILIM_LO	OFF	Device forced to stay in DCP BC1.2
1	0	0	1	DCP_Shorted	ILIM_HI	OFF	Charging mode
1	0	1	0	DCP/Divider1	ILIM_LO	OFF	Device forced to stay in DCP divider1
1	0	1	1	DCP/Divider1	ILIM_HI	OFF	Charging mode
1	1	0	0	SDP1	ILIM_LO	OFF	
1	1	0	1	SDP1	ILIM_HI	OFF	Data lines connected
1	1	1	0	SDP2	ILIM_LO	OFF	
1	1	1	1	CDP	ILIM_HI	CDP	Data lines disconnected Load Detect function active

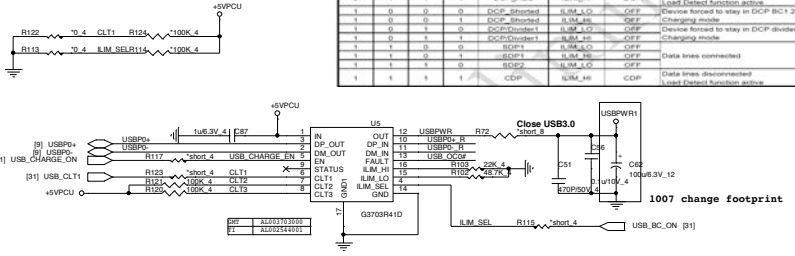

USB 3.0 Connector(UB3)

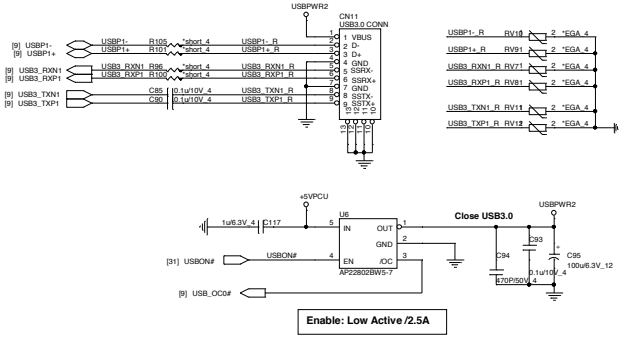

Card Reader (CRD)

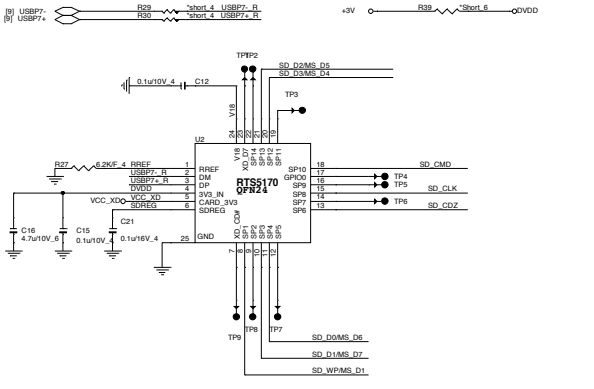

USB IO D/B (UB2)

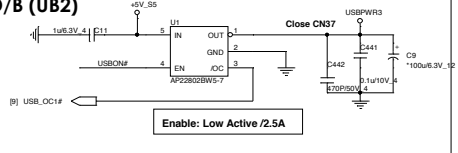

D/B USB Port

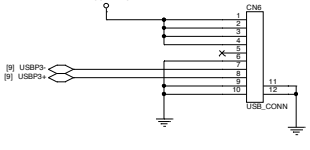

SD/MMC CARD READER (CRD)

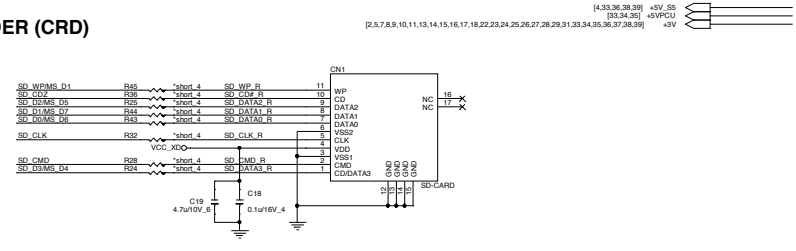

Quanta Computer Inc.

PROJECT : ZRT/ZRTA

Size	Document Number	Rev
	USB Port/ DB	1A

Date: Wednesday, February 11, 2015 Sheet 30 of 44

EC(KBC)

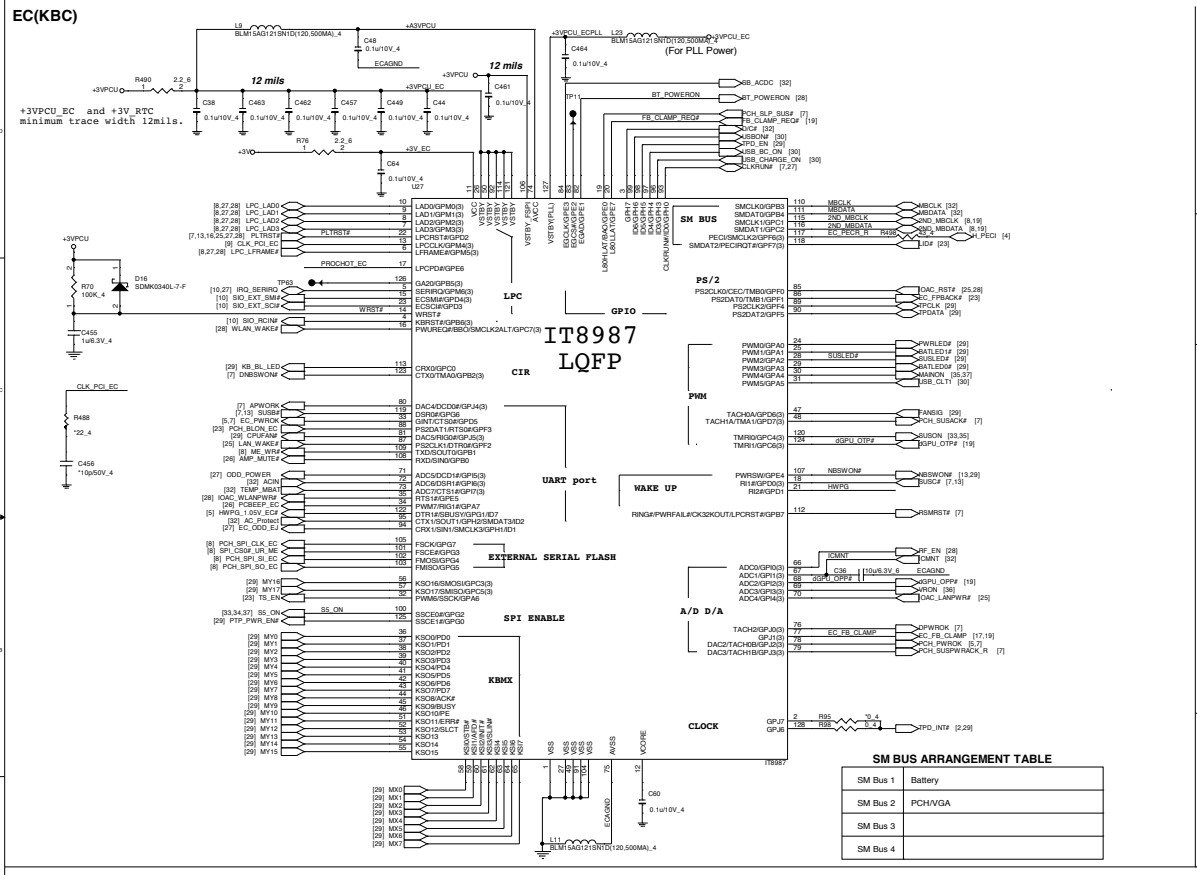

SM BUS ARRANGEMENT TABLE

SM Bus 1	Battery
SM Bus 2	PCH/VGA
SM Bus 3	
SM Bus 4	

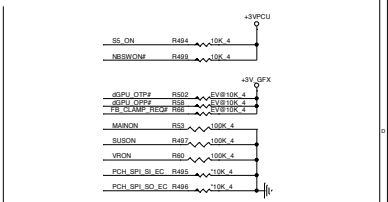

SM BUS PU(KBC)

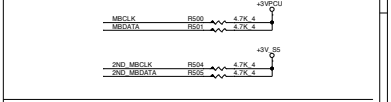

Battery B/I SW

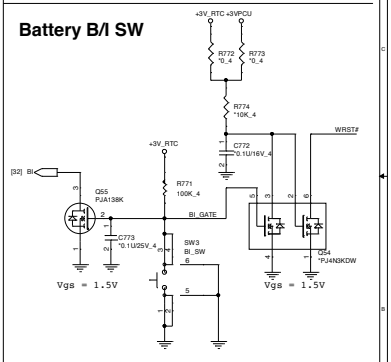

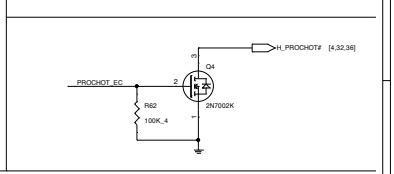

HWPG(KBC)

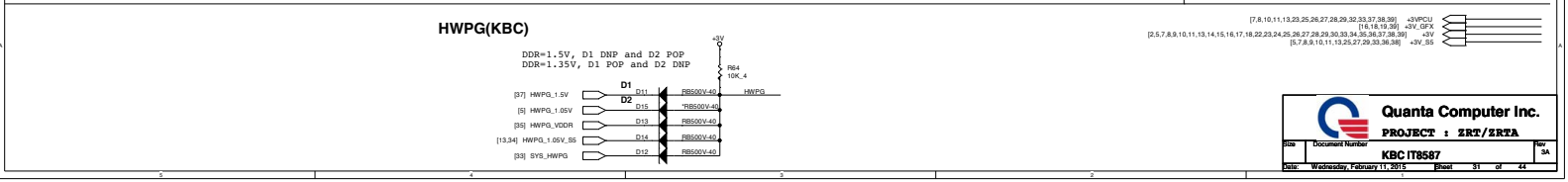

Quanta Computer Inc.	
PROJECT : ZRT/ZRTA	
Size / Document Number	KBC IT8587
Rev	3A
Date: Wednesday, February 11, 2015	Sheet 31 of 44

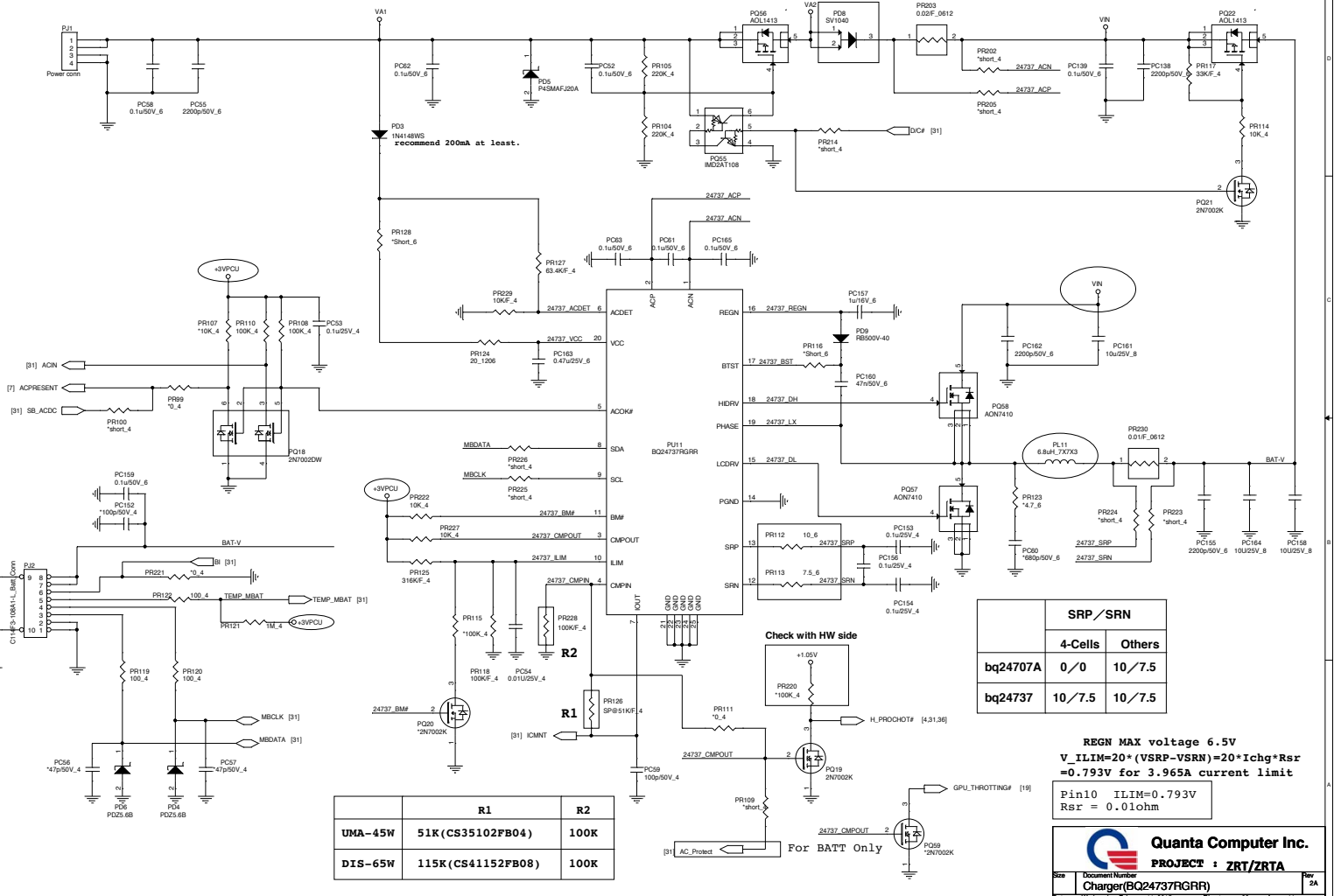

	SRP／SRN	
	4-Cells	Others
bq24707A	0／0	10／7.5
bq24737	10／7.5	10／7.5

	R1	R2
UMA-45W	51K(CS35102FB04)	100K
DIS-65W	115K(CS41152FB08)	100K

REGN MAX voltage 6.5V
V_ILIM=20*(VSRP-VSRN)=20*Ichg*Rsr
=0.793V for 3.965A current limit

Pin10 ILIM=0.793V
Rsr = 0.01ohm

Quanta Computer Inc.

PROJECT : ZRT/ZRTA

Size	Document Number	Rev
	Charger(BQ24737RGRR)	2A

Date: Wednesday, February 11, 2015 Sheet 32 of 44

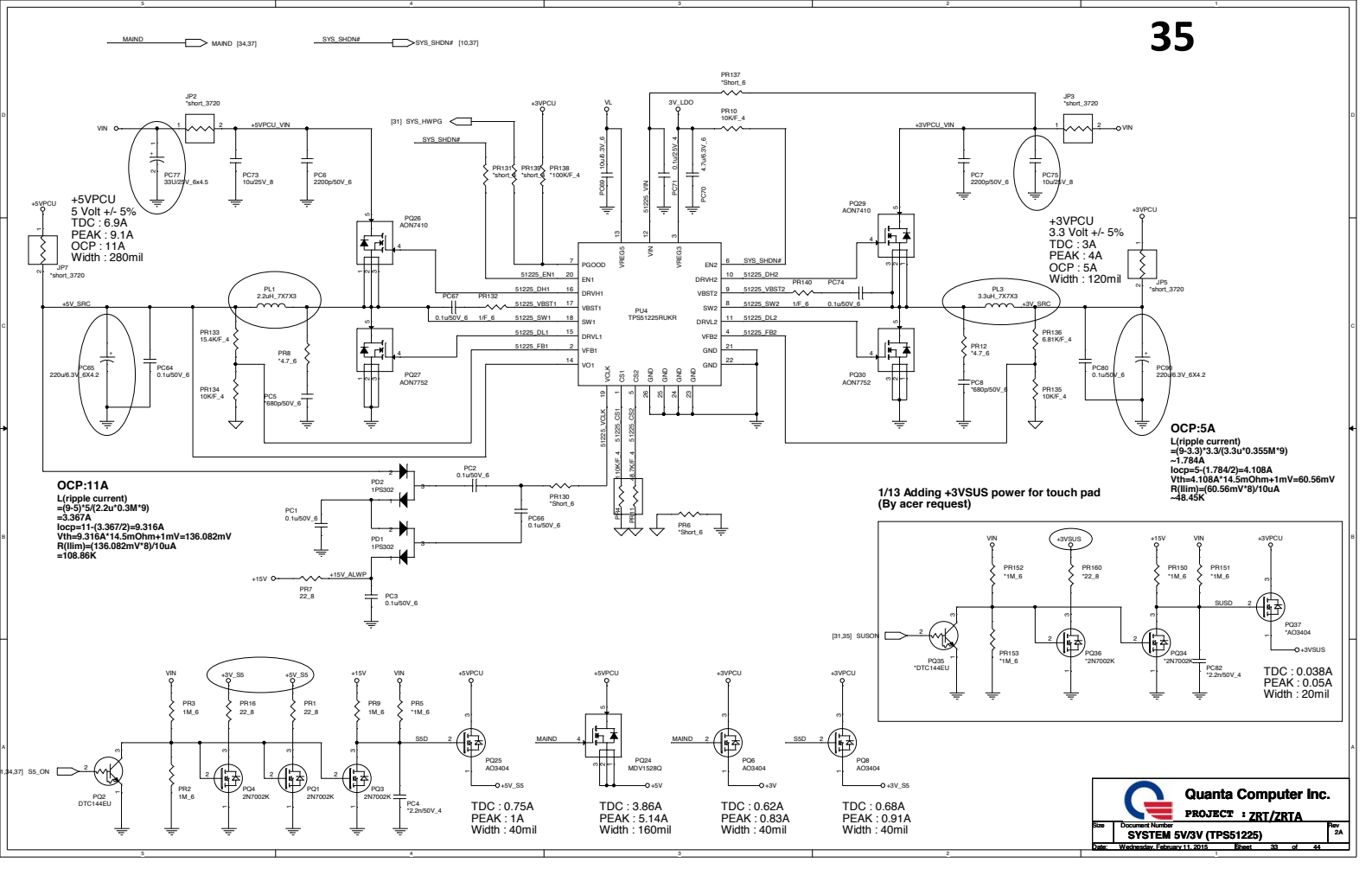

Quanta Computer Inc.

PROJECT : ZRT/ZRTA

Size	Document Number	Rev
	SYSTEM 5V/3V (TPS51225)	2A

Date: Wednesday, February 11, 2015 Sheet 33 of 44

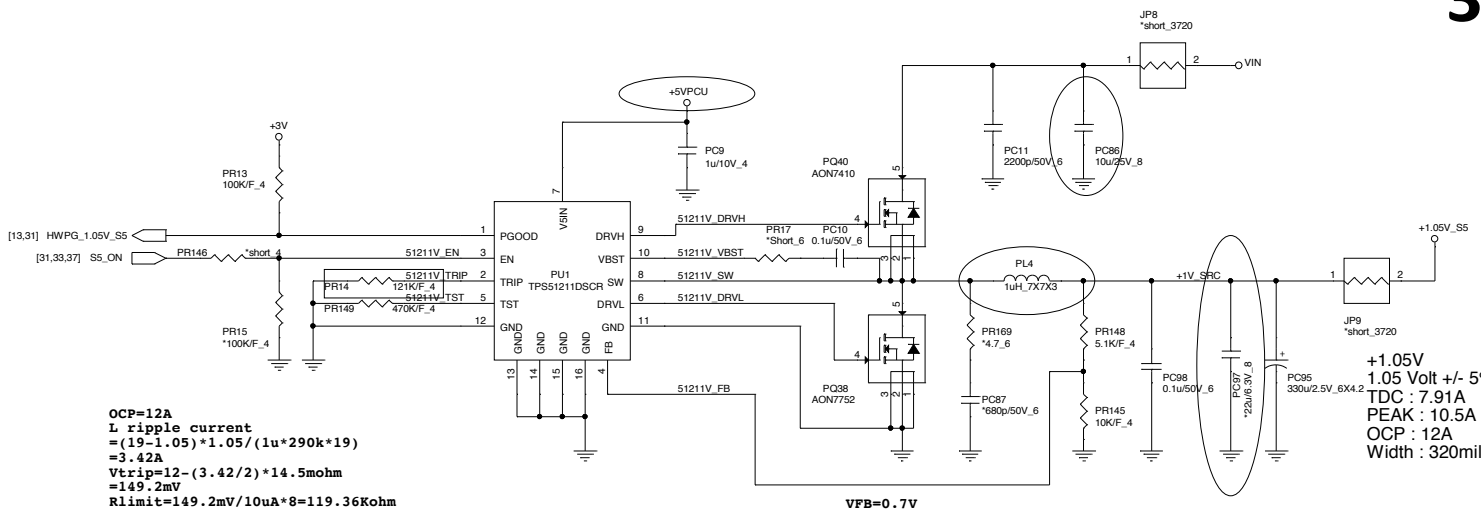

Quanta Computer Inc.

PROJECT : ZRT/ZRTA

Size	Document Number	Rev
	+1.05V_S5 (TPS51211)	2A

Date: Wednesday, February 11, 2015 Sheet 34 of 44

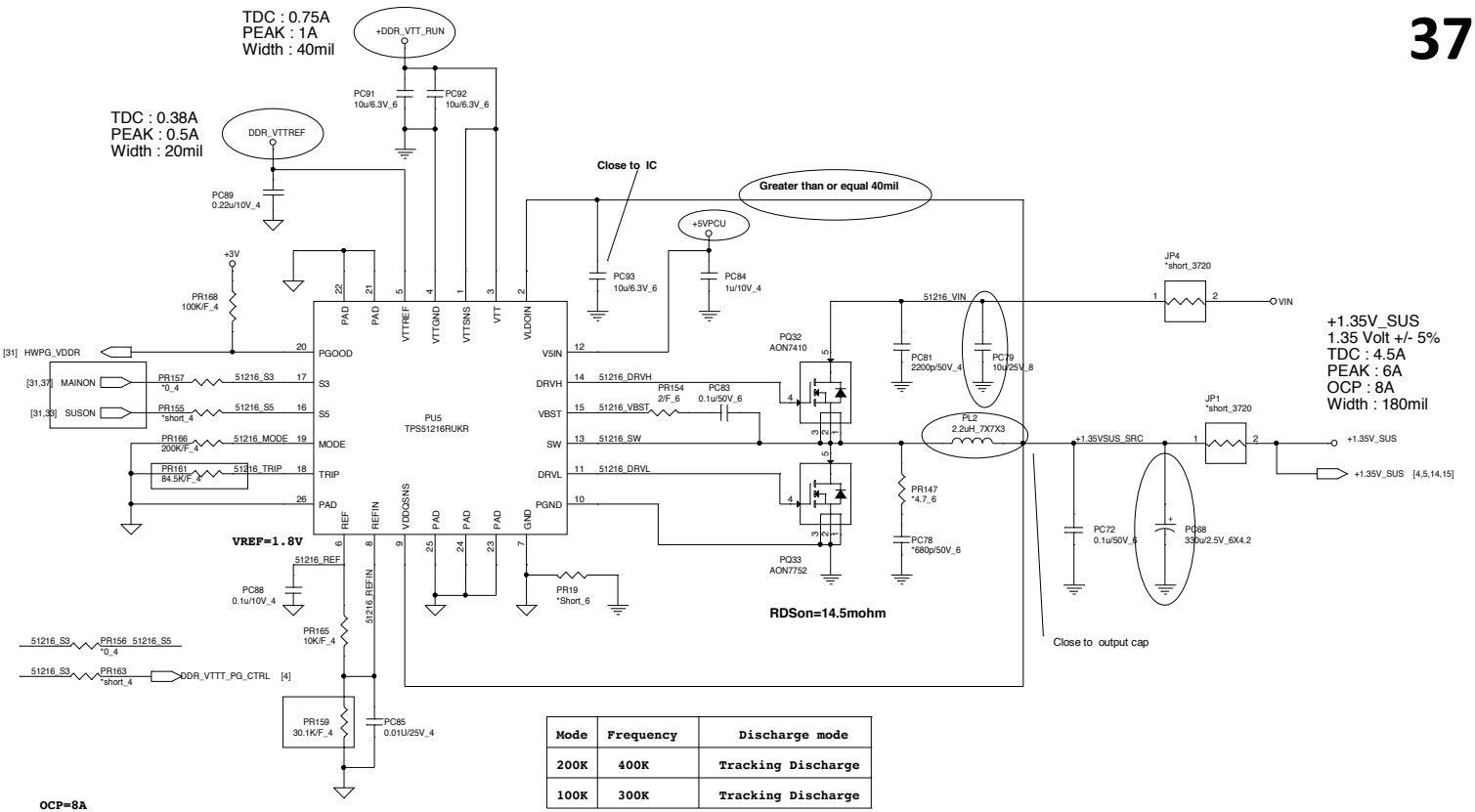

Mode	Frequency	Discharge mode
200K	400K	Tracking Discharge
100K	300K	Tracking Discharge

OCP=8A
L ripple current
=(19-1.35)*1.35/(2.2u*400k*19)
=1.425A
Vtrip=8-(1.425/2)*14.5mohm
=105.668mV
Rlimit=105.668mV/10uA*8=84.53Kohm

DDR=1.35V
PR84=10K/F_4
PR86=30.1K/F_4

	S3	S5	+1.35VSUS	REF	VTT
S0	1	1	ON	ON	ON
S3 (mainon off)	0	1	ON	ON	OFF
S4/S5	0	0	OFF	OFF	OFF

Quanta Computer Inc.

PROJECT : ZRT/ZRTA

Size	Document Number	Rev
	DDR 1.35V(TPS51216)	2A

Date: Wednesday, February 11, 2015 Sheet 35 of 44

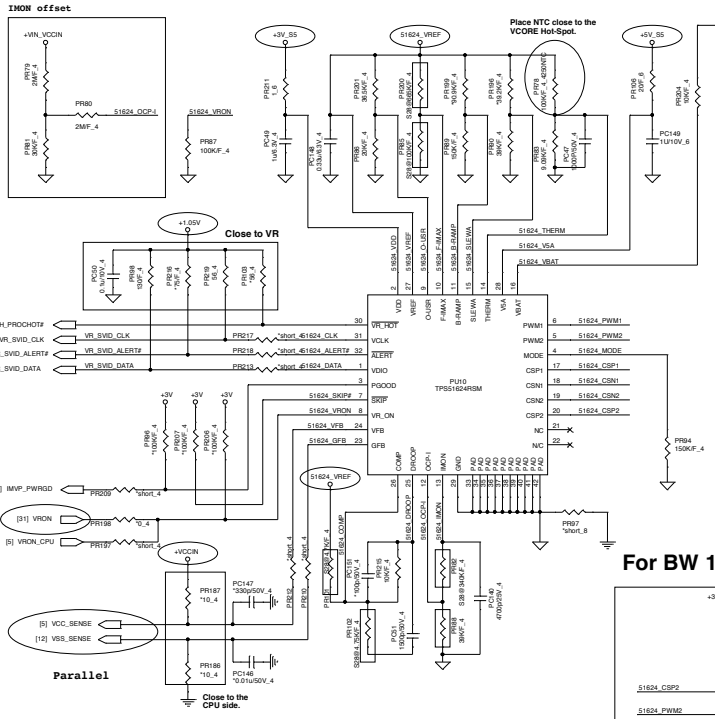

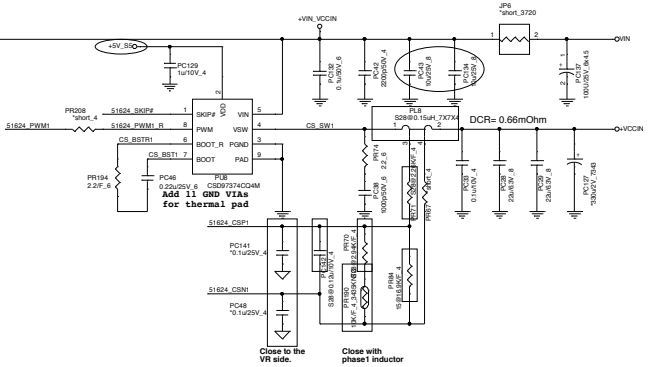

Rmode		PS3	OSR
	100K Ohm	ON	ON
	150K Ohm	ON	OFF

For BW 2 Phase

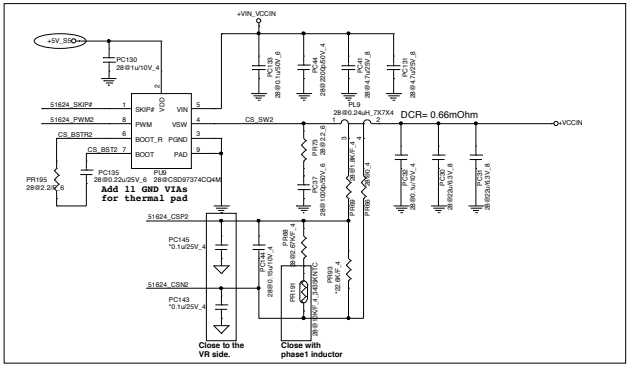

For BW 1 Phase

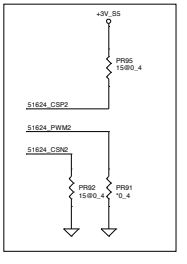

BW-U 15W (1 phase)

Icc TDC PL2：14A

Icc Max：32A

OCP：37A

Fsw：1.2MHz

VCORE L/L：

R_DC_LL：- 2.0mV/A

R_AC_LL：- 7.0mV/A

BW-U 28W (1 phase)

Icc TDC PL2：19A

Icc Max：40A

OCP：47A

Fsw：800KHz

VCORE L/L：

R_DC_LL：- 2.0mV/A

R_AC_LL：- 7.0mV/A

S28@

BW-U 28W 2 phase			
Location	Value	Location	Value
PL8	CV+24P0MZ00	PR85	CS35622FB10
PR71	CS21822FB14	PR101	CS22372FB11
PR82	CS41502FB18	PR102	CS31002FB26
PR70	CS22672FB12	PR200	CS42942FB13
PC142	CH4152K9B02		
Block 1.	Stuff		

PL9 0.24uH_7X7X4
PR84、PR93 *22.6K/F_4
PR92、PR95 *0_4
PC143、PC145 *0.1u/25V_4

Quanta Computer Inc.
PROJECT : ZRT/ZRTA

Size	Document Number	Rev
	+VCCIN(TPS51624)	2A

Date: Wednesday, February 11, 2015 Sheet 38 of 44

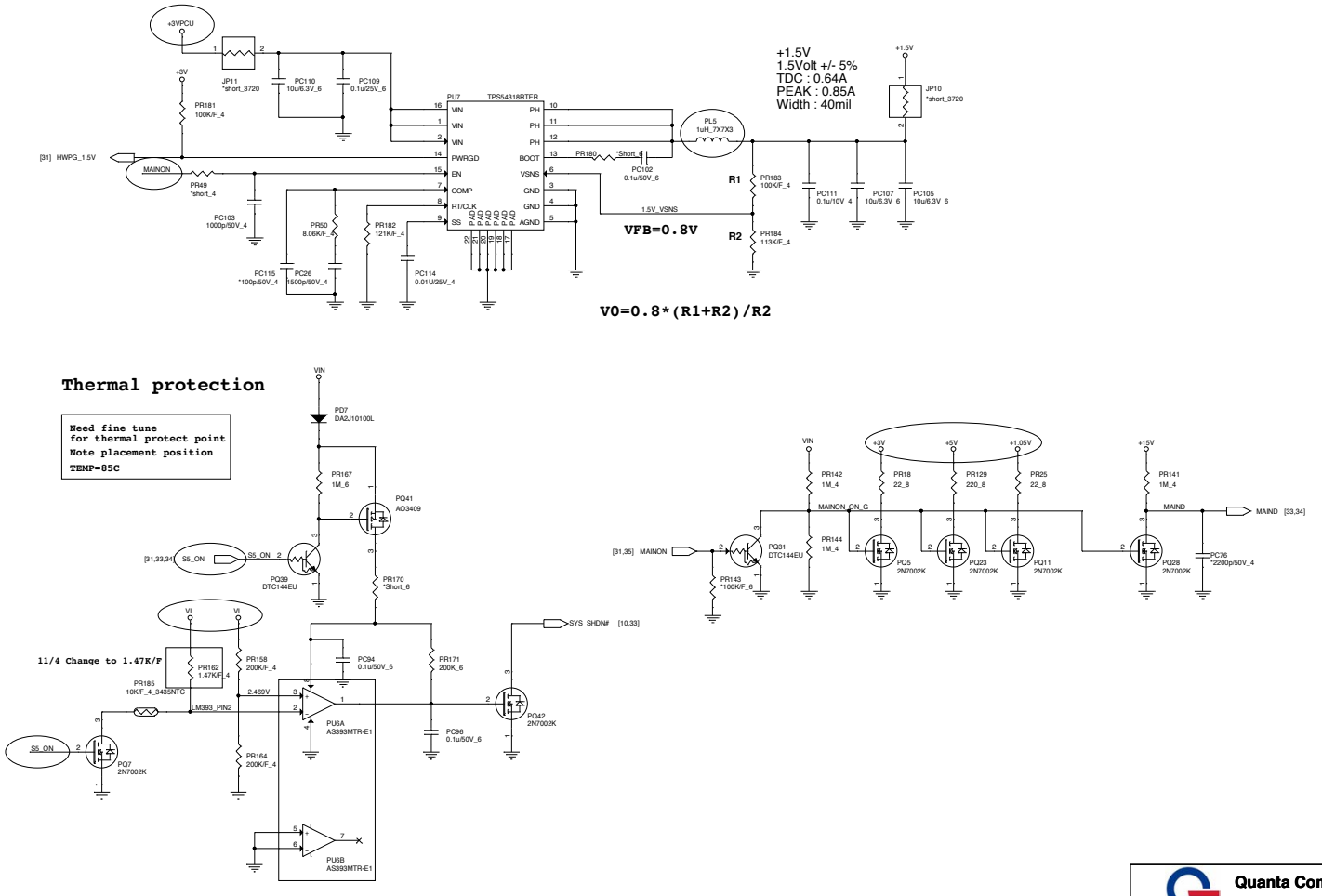

For EC control thermal protection (output 3.3V)

Quanta Computer Inc.

PROJECT : ZRT/ZRTA

Size	Document Number	Rev
	+1.5V/Thermal Protect	2A

Date: Wednesday, February 11, 2015 Sheet 37 of 44

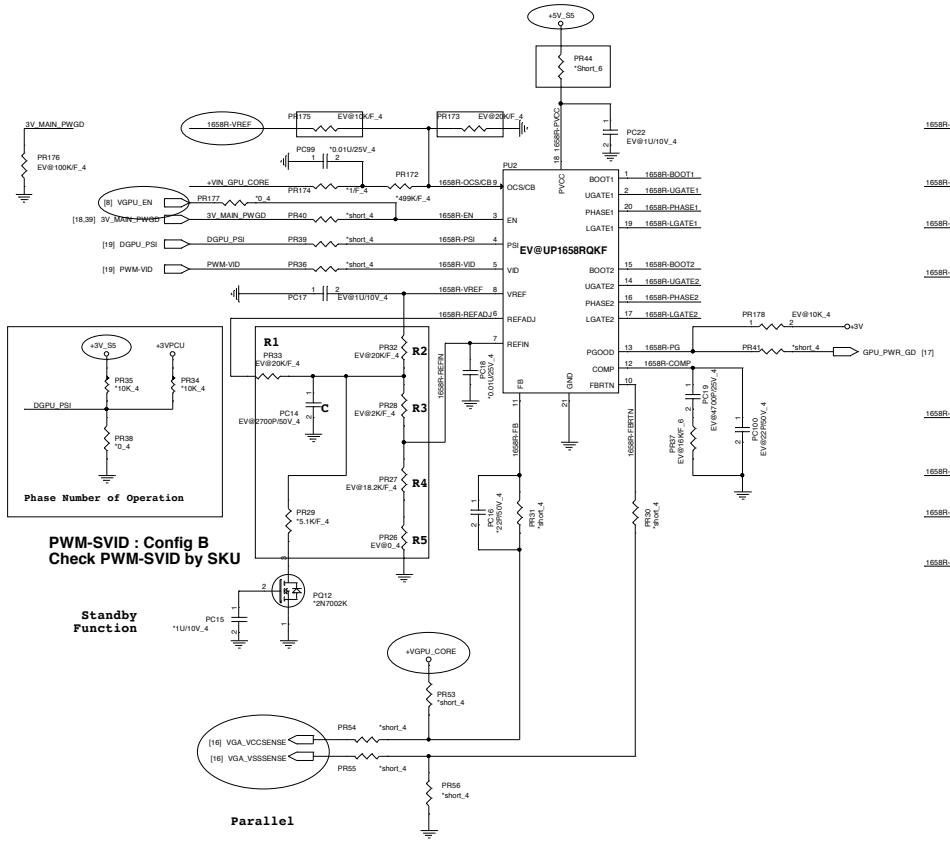

PWM-SVID : Config B
Check PWM-SVID by SKU

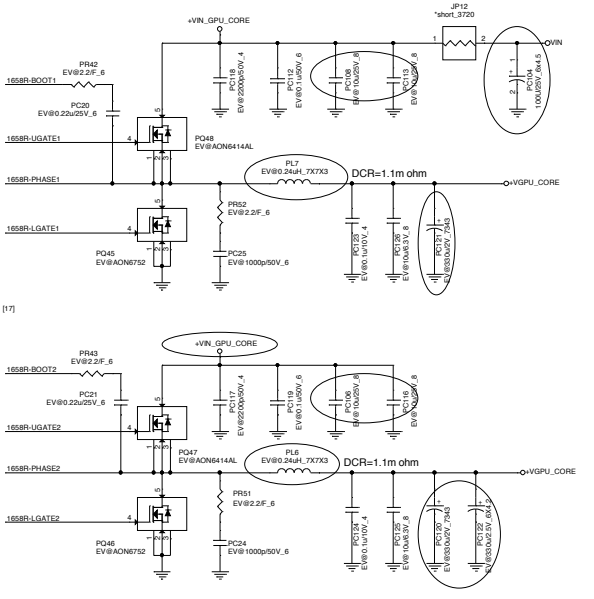

N16S-GT(23W)

+VGPU_CORE
Countinue current:26A
Peak current:51A
OCP:A
FSW:300KHz
L/L=0mV/A

Quanta Computer Inc.
PROJECT : ZRT/ZRTA

Size	Document Number	Rev
	+VGPU_CORE(UP1642PQAG)	2A

Date: Wednesday, February 11, 2015 Sheet 38 of 44

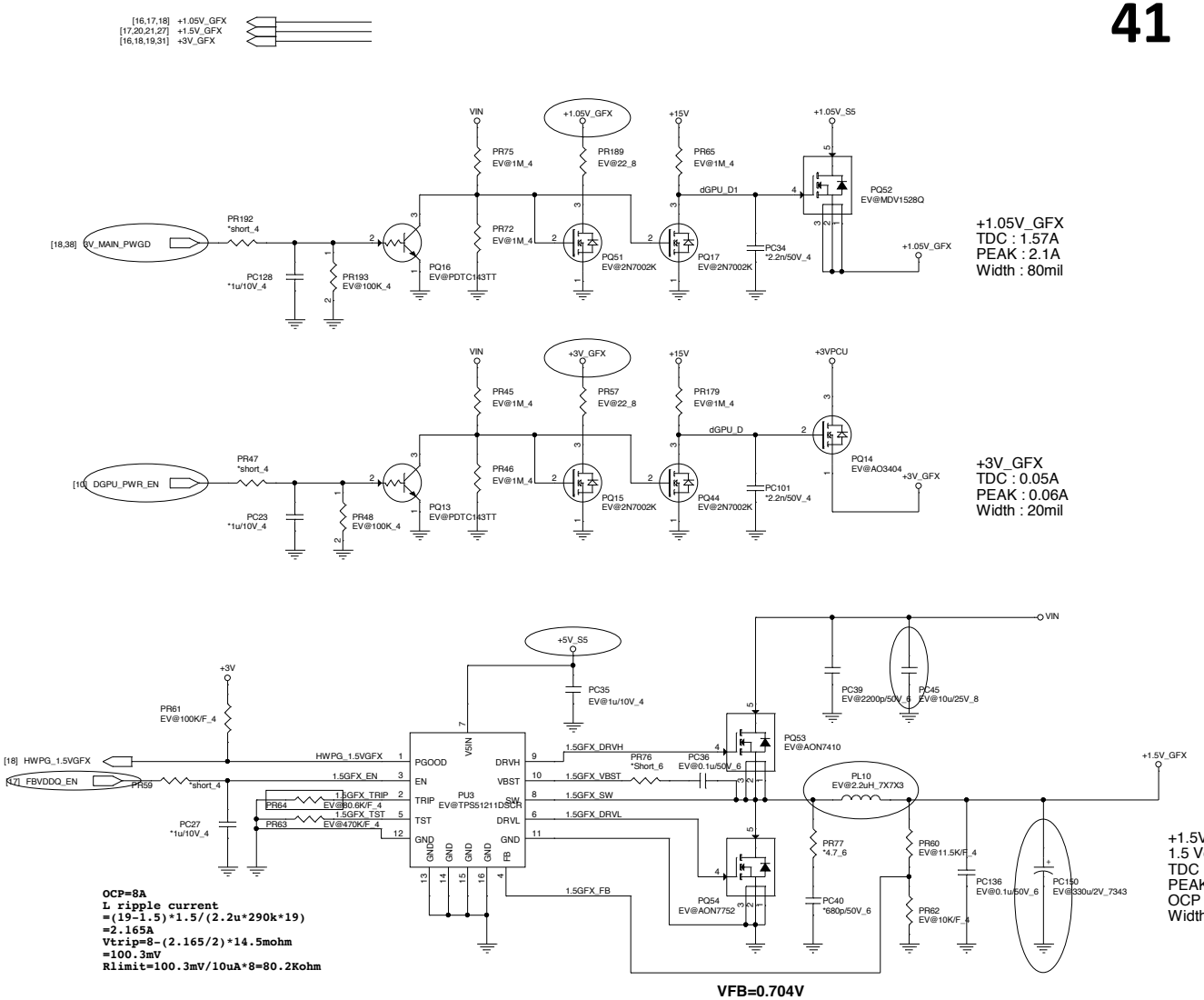

Quanta Computer Inc.		
PROJECT : ZRT/ZRTA		
Size	Document Number: +1.5V_GFX/+1.05V_GFX/+3V_GFX	Rev 2A
Date: Wednesday, February 11, 2015	Sheet 39 of 44	

VGA power up sequence

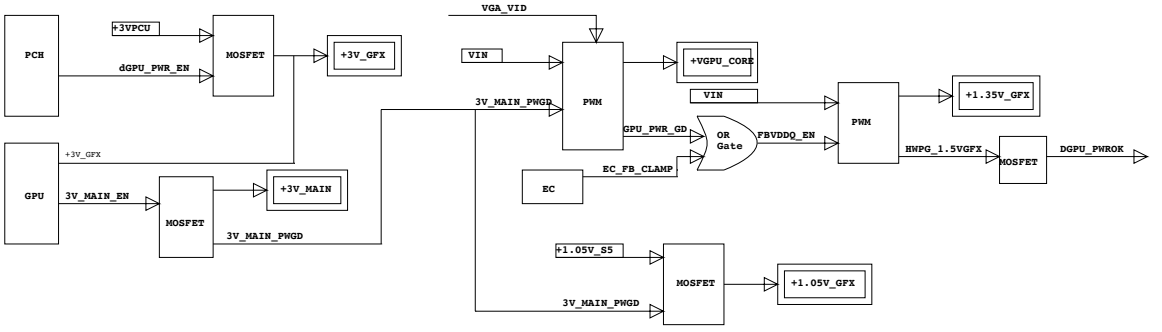

VGA Reset

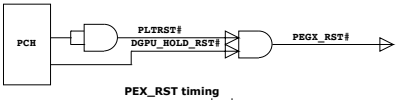

PEX_RST timing

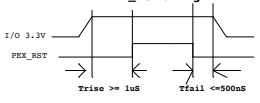

Power States

POWER PLANE	VOLTAGE	DESCRIPTION	CONTROL SIGNAL	ACTIVE IN
VIN	+10V~+19V	MAIN POWER	ALWAYS	ALWAYS
+3V_RTC	+3V~+3.3V	RTC POWER	ALWAYS	ALWAYS
+3VPCU	+3.3V	EC POWER	ALWAYS	ALWAYS
+5VPCU	+5V	USB CHARGE POWER	ALWAYS	ALWAYS
+15V	+15V	CHARGE PUMP POWER	ALWAYS	ALWAYS
+3V_S5	+3.3V	LAN/BT POWER	S5_ON	S0-S5
+5V_S5	+5V	USB POWER	S5_ON	S0-S5
+5V	+5V	HDD/SPK/HDMI POWER	MAINON	S0
+3V	+3.3V	PCH/GPU/Peripheral component POWER	MAINON	S0
+1.35VSUS	+1.35V	CPU/SODIMM/MD POWER	SUSON	S0-S3
+DDR_VTT_RUN	+0.675V	SODIMM/MD Termination POWER	MAINON	S0
LCDVCC	+3.3V	LCD POWER	LVDS_VDDEN	S0
+1.5V	+1.5V	MINI CARD/NEW CARD POWER	MAINON	S0
+1.05V	+1.05V	PCH CORE VCCST POWER	MAINON	S0
+VCCIN	variation	CPU CORE POWER	VRON	S0
+3V_GFX	variation	External GPU POWER	DGPU_PWR_EN	S0
+1.05V_GFX	+3.3V	External GPU POWER	3V_MAIN_EN	S0
+VGPU_CORE	+1.35V	External GPU POWER	3V_MAIN_EN	S0
+1.35V_GFX	+1.05V	External GPU POWER	FBVDDQ_EN	S0

Thermal Follow Chart

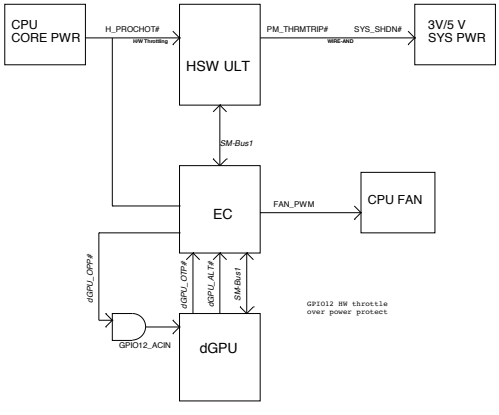

dGPU_OPP# EC notify HW throttle over power protect
dGPU_OTP# VGA thrmtrip# => inform EC over temperature protect

Quanta Computer Inc.
PROJECT : ZRT/ZRTA

Size	Document Number	Rev
	PWR Status & GPU PWR CRL & THRM	3A

Date: Wednesday, February 11, 2015 Sheet 49 of 44

Battery Mode

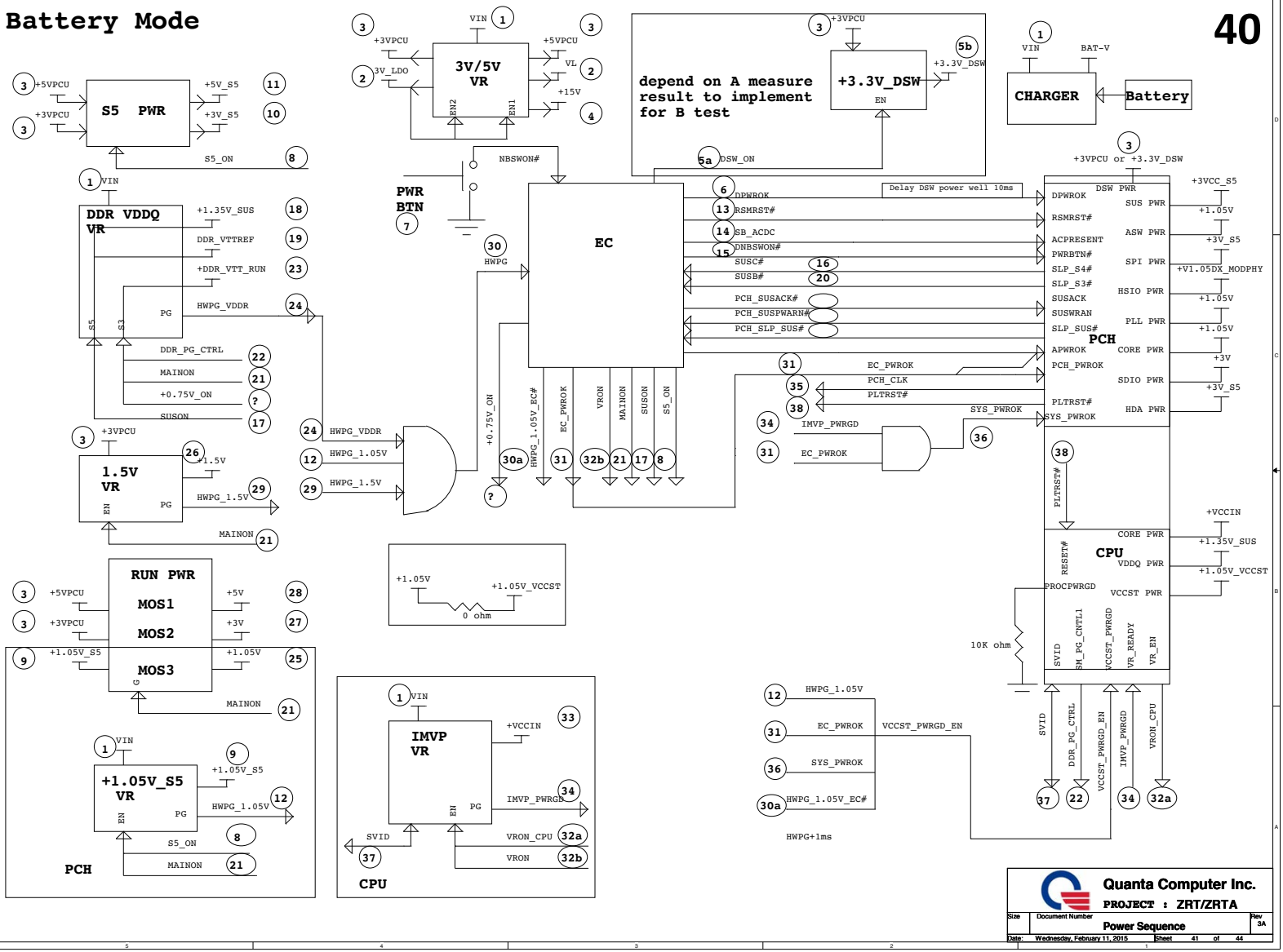

Quanta Computer Inc.

PROJECT : ZRT/ZRTA

Size	Document Number	Rev
	Power Sequence	3A

Date: Wednesday, February 11, 2015 Sheet 41 of 44

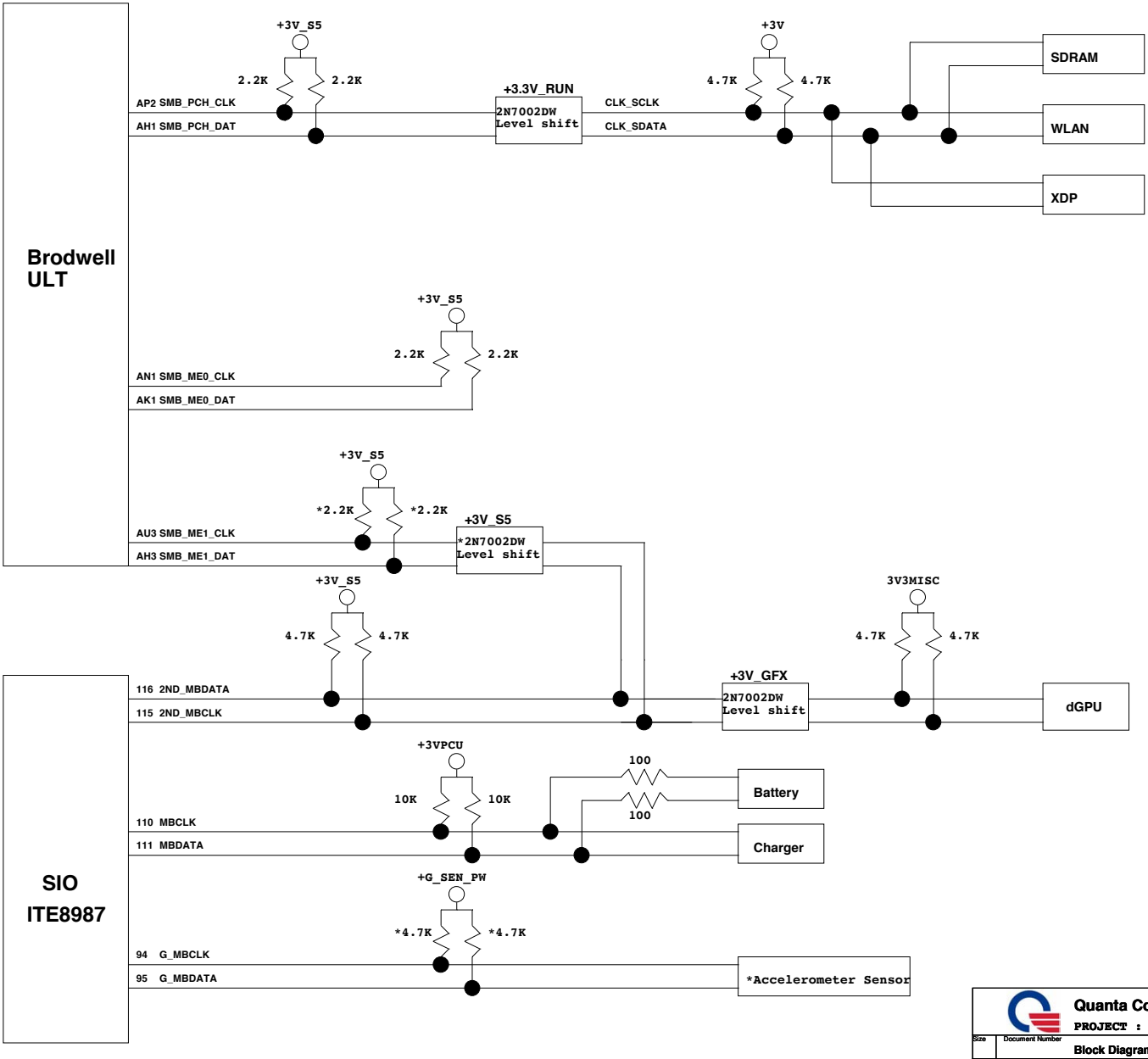

Quanta Computer Inc.

PROJECT : ZRT/ZRTA

Size	Document Number	Rev
	Block Diagram	3A

Date: Wednesday, February 11, 2015 Sheet 42 of 44

實線表defult
虛線表reserve

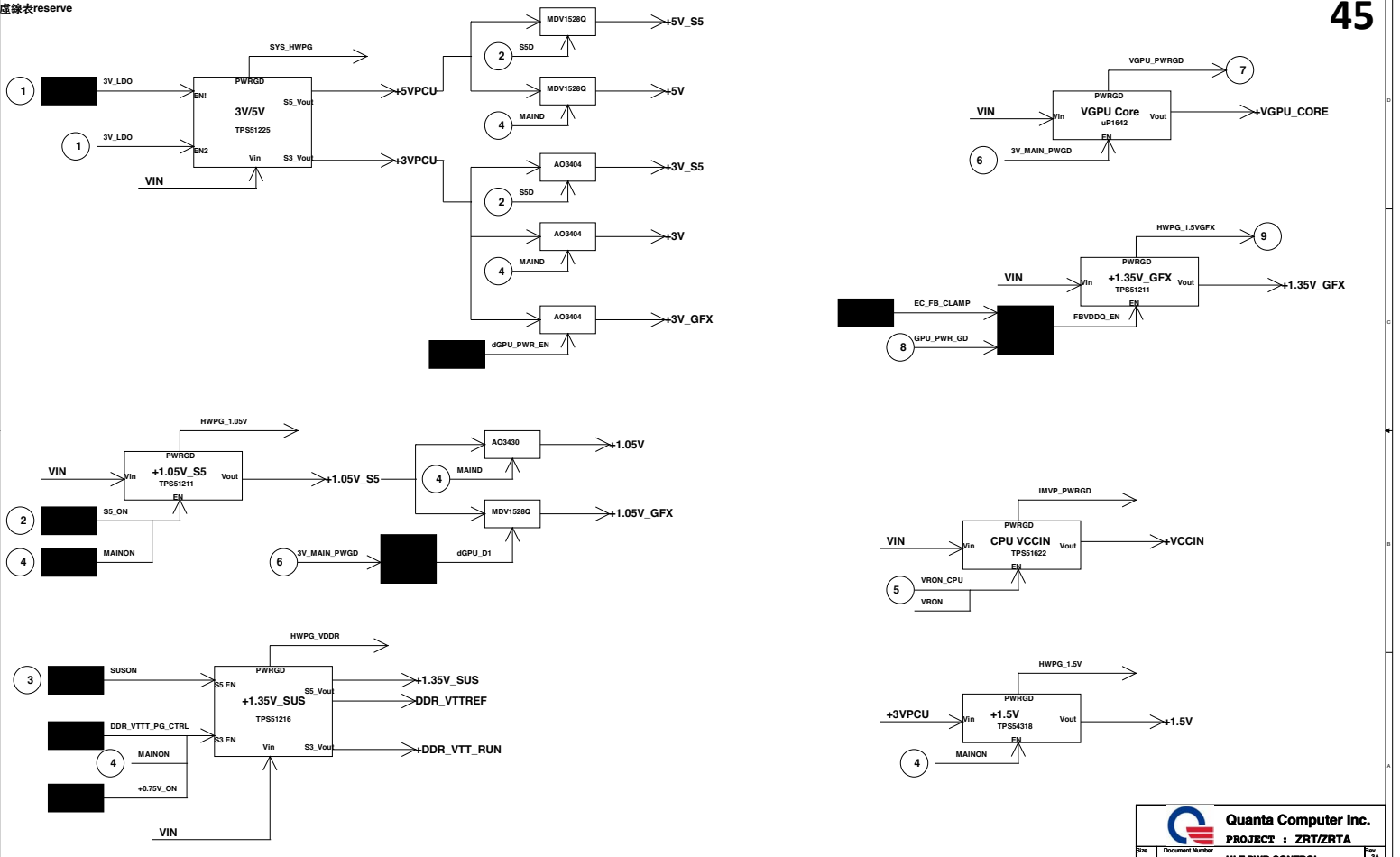

Quanta Computer Inc.

PROJECT : ZRT/ZRTA

Size	Document Number	Rev
	ULT PWR CONTROL	3A

Date: Wednesday, February 11, 2015 Sheet 43 of 44

Model	Version	CHANGE LIST
ZQ0	1A-1	1 2013/10/15 change pin define and add pwm IC.(page31)
		2 2013/10/15 Change VGA ITE solution to NXP.(page 23)
		3 2013/10/15 power board CN change to 6pin.(Page 23)
		4 2013/10/15 U5017.12 change 27M crystal to VGA IC.(Page 23)
		5 2013/10/15 U5017.14 add power rail +3V_RTC(page23)
		6 2013/10/15 strap0 R672 DG 50k PU.(Page 19)
		7 2013/10/15 Change AND gat to Q63 D-MOS.(Page 19)
		8 2013/10/15 change pin define and add pwm IC U17.(Page 46)
		9 2013/10/15 for GC6 stuff R228\R1013\R226\R1012.un-stuff Q24\Q26\R227\R1011. (Page19)
		10 20131015 For GC6 NV DG GC6_FB_EN PD.(Page10)
		11 2013/10/15 following up acer define and swap USB3 and USB2 port.(Page9)
		12 2013/10/15 swap CAP C8579/C8580 to Vrefo and resistor R5214/R5215 to Line in.(Page30)
		13 2013/10/15 U27.30/U27.31 del fan Pwm signal.(Page32)
		14 20131015 change LVDS\USB3\RJ45\FAN\TPD\USB DB CN\DC-IN CN\Power Button\Cardreader\KB BLK CN\Power board, footprint.
	1A-2	1 2013/10/16 JDIM5 Swap M_B_DQS2/M_B_DQS3 and swap M_B_DQS#2/M_B_DQS#3.(page15)
		2 2013/10/16 JDIM6 Chage net name M_B_DQS#[7:0] to M_A_DQS#[7:0].(page14)
		3 2013/10/16 Add RTC charge circuit.(page8)
		4 2013/10/16 BT1.1 Chage +3V_RTC_0 to VCCTC_2.(page8)
		5 2013/10/15 change power rail from +3V_RTC_0 to VCCRTC_2.(page23)

DOC NO.	PROJECT MODEL :	ZQ0	APPROVED BY:		DATE:
	PART NUMBER:		DRAWING BY:		REVISON:

Quanta Computer Inc.
PROJECT : ZRT/ZRTA
Size | Document Number: Change list-1 | Rev: 3A
Date: Wednesday, February 11, 2015 | Sheet 44 of 44